狮门微
LIONSGATE SEMI

PRODUCT CATALOGUE

功率半导体产品

专注于功率半导体器件
设计开发、系统应用和智能制造



由于产品的更新迭代，本产品型录的部分参数数据会产生变化，建议您在查阅本产品型录的同时，请联系我们，以便您及时获得最新的资讯。

All technical data, drawings and product information contained here may be subject to change, in order to provide you with a continuously improved products, please contact with us for up to date information.

www.lionsgateigbt.com

V:LGS-PM-MKT2609

上海狮门半导体有限公司 Shanghai Lionsgate Semiconductor Co., Ltd.
狮门微电子(温岭)股份有限公司 Lionsgate Microelectronics（Wenling）Co.,Ltd.

从芯出发
改变世界



目录 CONTENTS

01 公司简介 Company Introduction 01

02 发展历程 Development History 03

03 资质认证 Company Qualification 05

04 产品命名规则 Type Definition 07

05 产品选型 Product Datasheet 09

06 垂直整合制造 Integrated Device Manufacture 43

07 应用领域 Application Area 44

08 先进实验室 Advanced Laboratory 45

09 品牌文化 Brand Culture 51

10 联系我们 Contact Us 52

COMPANY
INTRODUCTION
公司简介

上海狮门半导体有限公司

- 成立于**2020**年
- 致力于高端功率半导体器件国产化
- 专注于功率半导体器件的设计开发、系统应用和智能制造
- 集研发、生产、销售和服务为一体的创新型科技企业
- 产品：工业级和车规级的IGBT/SiC模块、IPM智能功率模块和分立器件

- Founded in **2020** (referred to as Lionsgate Semi)
- Committed to the localization of high-end power semiconductor devices.
- Focus on R&D, application solution and intelligent manufacturing for power semiconductors.
- An innovative technology enterprise collects together R&D, manufacturing, and sales.
- Various types of power semiconductor devices（IGBT/SiC module、IPM module and Discrete）for automotive qualified & industrial qualified.

LIONSGATE SEMI

总部&制造基地——上海松江
HQ &Manufacturing Base——Shang Hai·Songjiang

- 研发中心：研发技术、新品导入
- 运营中心：人才引进、产品评估
- 制造工厂：5000㎡
  封装产线：2条
  IGBT产能约100万颗

- R&D Center: R&D technology，NPI Dep. Product Evaluation
- Operation Center: Talent Introduction，Application Evaluation
- Manufacture Factory: 5000㎡
  2 production lines
  1 million pcs / Annual Production

制造基地——浙江台州
Manufacturing Base——Zhe Jiang·Taizhou

- 实验中心、工程技术、批量生产
- 智能工厂：20000㎡
- 规划产线：10条（分期完成）
  一期产能约325万颗（3条产线）

- Advanced Laboratory, Engineering Technology, Volume Production
- 20000㎡ Manufacture Factory
  （completion by stages with 10 production lines ）
- Phase I project : 3 production lines
  （3.25 million pcs / Annual Production）

研发中心——中国台湾
R&D Center——Tai Wan



DEVELOPMENT

HISTORY

发展历程



2020-2022

上海狮门半导体有限公司（以下简称：狮门半导体）注册成立

公司位于上海松江区

Lionsgate Semi was incorporated.
Located in Songjiang District at Shanghai.

2021

- **上海基地修建**
  Shanghai Manufacture Factory was built.
- **上海基地制造工厂实验中心落成**
  Advanced laboratory at Shanghai was built.

2022

- **上海基地产线通产**
  Shanghai manufacture factory started production.



2023

- **上海基地IGBT各产品批量交付**
  Mass production of IGBT at Shanghai factory
- **狮门半导体通过ISO9001质量体系认证**
  Lionsgate Semi was certificated by ISO9001.
- **狮门半导体功率器件生产项目签约成功并落地浙江温岭，狮门微电子(温岭）股份有限公司（以下简称:狮门微电子）注册成立**
  The power device production project of Lionsgate Semi was successfully signed at Wenling city in Zhejiang province. Lionsgate Microelectronics was incorporated and Zhejiang manufacture factory was in construction.
- **狮门微电子既狮门半导体公司的浙江温岭基地制造工厂土建改造完成**
  Lionsgate Microelectronics has completed the renovation of its manufacturing plant.
- **狮门半导体通过REACH认证、RoHS认证和UL认证**
  Lionsgate Semi Was Certificated by REACH, RoHS and UL.



2024

- **浙江基地制造工厂完成洁净车间建设，设备与产线调试完成**
  The clean workshop construction of Zhejiang Base Manufacturing Plant was completed. And The production lines are being debugged.
- **狮门半导体通过 IATF 16949 汽车质量管理体系认证**
  Lionsgate Semi was certificated by IATF 16949.
- **狮门微电子入选科技型中小企业（浙江省）**
  Lionsgate Microelectronics was recognized as Small & Medium-sized Technology-based Enterprise in Zhejiang Province.



2025

- **浙江基地工厂产线批量通产，实验中心落成**
  Mass production was achieved at Zhejiang Manufacturing Base, advanced laboratory was Built.
- **入选创新型中小企业（上海市&浙江省）**
  Was recognized as Innovative Small & Medium- sized Enterprise（Shanghai & Zhejiang Province）
- **狮门微电子荣获“台州市研发中心”和 “企业技术中心”认定**
  OLionsgate Microelectronics was awarded “R&D Center”and “Technical Center” of Taizhou City.
- **狮门微电子通过 IATF 16949 汽车质量管理体系认证**
  Liongsgate Microelectronics was certificated by IATF 16949.
- **狮门微电子通过 DCMM 二级认证**
  Liongsgate Microelectronics was certificated by DCMM (level 2).
- **狮门半导体入选上海市松江区“智能制造示范工厂”**
  Lionsgate Semi was selected as an "Intelligent Manufacturing Demonstration Factory" in Songjiang District. (Shanghai)
- **狮门半导体荣膺上海市“专精特新”中小型企业，并入库上海市科技型中小企业**
  Lionsgate Semi was awarded the Specialized & Sophisticated SMEs (Shanghai), and was selected the Technology-based Small & Medium Enteprises TSMEs (Shanghai).
- **狮门微电子获得ISO14001环境管理体系认证和ISO45001职业健康安全管理体系认证，并荣获台州市“绿色低碳工厂”。**
  Lionsgate Microelectronics was certificated by ISO14001 & ISO45001, and was awarded as the Green Low-Carbon Factory (Taizhou).

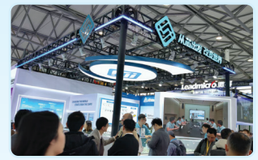

2026 - 至今

- **狮门微受邀以全产业链（IDM）联合参展 SEMICON 2026**
  Liongate Semi has been invited to participate in SEMICON 2026 as an IDM.
- **狮门微（LIONSGATE SEMI）携手光芯创域（GXCY-SEMI）联合参展 2026 年慕尼黑上海电子展**
  Liongate Semi partners with GXCY-SEMI to jointly participate in the 2026 Munich Shanghai Electronica Exhibition.



COMPANY
QUALIFICATION
资质认证

打造功率半导体智能制造工厂

Build a Intelligent Automation Factory for Semiconductor Module.

拥有自主知识产权和品牌

Own Independent Intellectual Property Rights and Brand.

8+

体系认证
System Certification

- ISO9001 质量管理体系认证
  Quality System Certification-bsi.
- IATF16949 质量管理体系认证
  Quality System Certification -bsi.
- ISO14001 质量管理体系认证
  Quality System Certification-bsi.
- ISO45001 质量管理体系认证
  Quality System Certification-bsi.
- REACH 认证
  REACH Certification-SGS
- UL 认证
  UL Certification- UL
- RoHS 认证
  RoHS Certification-SGS
- 数据管理能力成熟度受管理级（2级）
  DCMM (level 2)

27+

发明专利+实用新型专利
Invention Patents & Utility Model Patents
（另有19项申请中 19 Patents Pending）

- 科技型中小企业
  Small & Medium-sized Technology-based Enterprise
  2024
- 创新型中小企业
  Innovative Small & Medium-sized Enterprise
  2025
- 智能制造示范工厂
  （上海松江区）
  Intelligent Manufacturing Demonstration Factory
  2025
- “专精特新”中小型企业
  （上海市）
  Specialized & Sophisticated SMEs (Shanghai)
  2025



IGBT & SiC 模块命名规则

TYPE DEFINITION FOR IGBT & SiC MODULE

PA | 075 | G | 120 | K0 | XXXXX

CIRCUIT TYPE

PA: 3 Phase Bridge+Brake+Rectifier
PB: 3 Phase Bridge+Rectifier
DA: Dual/Half Bridge
DB: Half Bridge without NTC
FA: Fourpack
FB: Fourpack+Rectifier
SA: Sixpack
TL: 3 Level

CURRENT RATING

IGBT:	SiC:
010: Ic = 10A	**02:** Rds(on)=2 mΩ
015: Ic = 15A	**03:** Rds(on)=3 mΩ
020: Ic = 20A	**04:** Rds(on)=4 mΩ
025: Ic = 25A	**05:** Rds(on)=5 mΩ
035: Ic = 35A	**08:** Rds(on)=8 mΩ
040: Ic = 40A	**14:** Rds(on)=14 mΩ
050: Ic = 50A	**15:** Rds(on)=15 mΩ
075: Ic = 75A	**18:** Rds(on)=18 mΩ
100: Ic = 100A	**45:** Rds(on)=45 mΩ
150: Ic = 150A	**60:** Rds(on)=60 mΩ
200: Ic = 200A	
300: Ic = 300A	

MODULE TYPE

G: IGBT Module
M: Si MOS
C: SiC MOS
H: Hybrid IGBT
F: High Speed IGBT
B: Parallel Operation IGBT

VOLTAGE

IGBT:	SiC:
065: Vces = 650V	**065:** Vces = 650V
075: Vces = 750V	**075:** Vces = 750V
120: Vces = 1200V	**120:** Vces = 1200V
170: Vces = 1700V	**170:** Vces = 1700V
330: Vces = 3300V	

PACKAGE TYPE

K0: Econo Pack 3 2 Pin
K1: Econo Pack 3 3 Pin
K2: Econo PIM3 4 Pin
K4: Econo PIM3 4 - in - 1 package
K6: Econo Pack 3 6 - in - 1 package
M0: Econo Dual 3
N0: Econo PIM 2
N1: Econo Pack 2 6-in-1 package
N2: Econo PIM 2 KT3
A0: Hybrid Pack Drive
AL: Hybrid Pack Drive Long Tab
A1: Hybrid Pack 1
A2: Hybrid Pack 4
T1: 34mm
T0: 62mm
T4: 45mm
W1: Easy PIM 1B / Easy Pack 1B
W2: Easy PIM 2B / Easy Pack 2B
W3: Easy Pack 3B
W4: Easy Pack 4B
C0: DCM - 1000
T8: P89

CUSTOM

单管命名规则

TYPE DEFINITION FOR DISCRETE

ZA | 050 | G | 120 | Z | C | XX

CIRCUIT TYPE

ZA: Single Switch

CURRENT RATING

IGBT:	SiC:
010: Ic =10A	**006:** Rds(on)=6mΩ
015: Ic =15A	**019:** Rds(on)=19mΩ
025: Ic =25A	**025:** Rds(on)=25mΩ
040: Ic =40A	**030:** Rds(on)=30mΩ
050: Ic =50A	**045:** Rds(on)=45mΩ
075: Ic =75A	**080:** Rds(on)=80mΩ

MODULE TYPE

G: IGBT
C: SiC MOSFET

VOLTAGE

IGBT:	SiC:
065: Vces = 650V	**065:** Vdss = 650V
075: Vces =750V	**075:** Vdss =750V
120: Vces =1200V	**120:** Vdss =1200V
170: Vces =1700V	**170:** Vdss =1700V
200: Vces =2000V	**200:** Vdss =2000V

PACKAGE TYPE

Z: T0-247 4L
Y: T0-247P 4L
W: T0-247 3L
Q: T0-247P 3L
B: T0-263 7L
P: T0-220 3L
T: SOT-227
A: TOLT

PRODUCTION BASE

CUSTOM

IPM命名规则

TYPE DEFINITION FOR IPM

SA | 006 | G | 065 | P0

CURRENT TYPE

SA: 3 Phase Bridge

CURRENT RATING

IGBT:	SiC:
010: Ic =10A	**002:** Rds(on)=2mΩ
015: Ic =15A	**003:** Rds(on)=3mΩ
020: Ic =20A	**005:** Rds(on)=5mΩ
050: Ic =50A	

MODULE TYPE

G: IGBT
C: SiC MOSFET

VOLTAGE

IGBT:	SiC:
065:: Vces = 650V	**065:** Vdss = 650V
120: Vces =120V	**120:** Vdss =1200V
330: Vces =3300V	**330:** Vdss =3300V

PACKAGE TYPE

P0: SOP23
P1: DIP24
P2: DIP24HL

Easy 1B

PA 系列 (PA series: 3 Phase Bridge+Brake+Rectifier)
SA 系列 (SA series: Sixpack)

额定电压 Rated Voltage: 650V / 1200V
电流范围 Current Range: 10A / 15A / 25A / 30A / 35A / 50A



行业应用 Applications

工业变频器、工业伺服、不间断电源 UPS、感应加热、功率电源、储能、风力发电、太阳能光伏、新能源汽车

Frequency converters, Industrial servo controller, Uninterrupted power supply (UPS) , Inverter welder, Induction heater, Energy storage, Wind power, PV solar, New energy vehicles, etc.

产品型号 Part Number	Vces (V)	Ic (A)	Vce(sat) Tj=25 °C (V)	电路拓扑结构 Configuration	封装 Housing
PA030G065W1	650	30	1.58	3 Phase Bridge+Brake+Rectifer	W1
PA010G120W1	1200	10	1.74	3 Phase Bridge+Brake+Rectifer	W1
PA015G120W1	1200	15	1.77	3 Phase Bridge+Brake+Rectifer	W1
PA025G120W1	1200	25	1.78	3 Phase Bridge+Brake+Rectifer	W1
SA030G065W1	650	30	1.59	Sixpack	W1
SA015G120W1	1200	15	1.77	Sixpack	W1
SA025G120W1	1200	25	1.78	Sixpack	W1
SA035G120W1	1200	35	1.71	Sixpack	W1
SA050G120W1	1200	50	1.75	Sixpack	W1

外型尺寸图
Outline Dimension

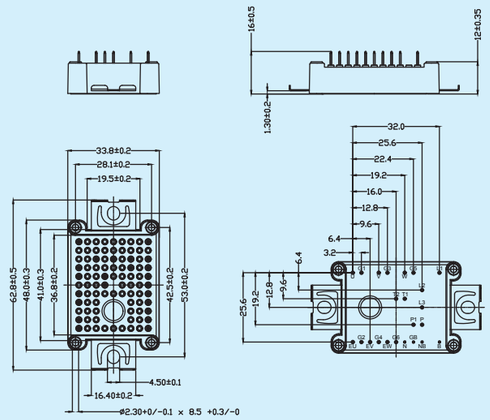

PA Series

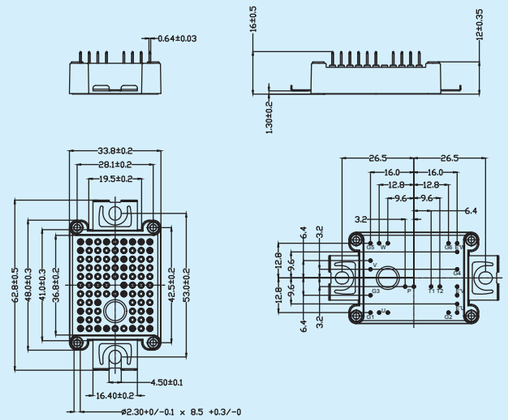

SA Series

拓扑
Circuit Diagram

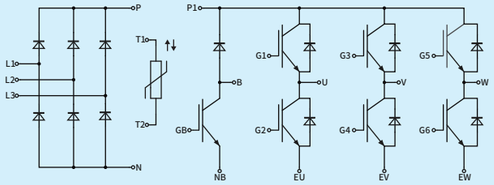

PA Series

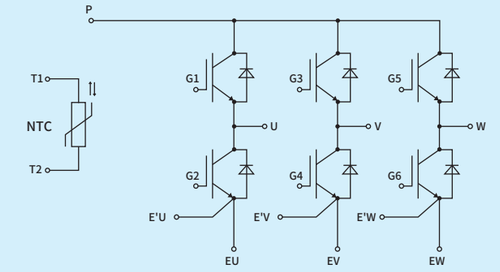

SA Series

EASY 2B



PA 系列 (PA series: 3 Phase Bridge+Brake+Rectifier)
PB 系列 (PB series: 3 Phase Bridge+Rectifier)
SA 系列 (SA series: Sixpack)
TL 系列 (TL series: 3 Level)

额定电压 Rated Voltage: 650V / 1200V
电流范围 Current Range: 25A / 35A / 40A /50A / 75A / 100A /150A

DA 系列 碳化硅 (DA series SiC: Dual/Half Bridge)

额定电压 Rated Voltage: 1200V
导通阻抗 Rds（on）Tc =25°C: 3.53mΩ / 7.65mΩ / 13.92mΩ

行业应用 Applications

工业变频器、工业伺服、不间断电源 UPS、功率电源、储能、太阳能光伏、新能源汽车

Frequency converters, Industrial servo controller, Uninterrupted power supply (UPS), Inverter welder, Energy storage, PV solar, New energy vehicles, etc.

产品型号 Part Number	Vces (V)	Ic (A)	Vce(sat) Tj=25 °C (V)	电路拓扑结构 Configruation	封装 Housing
TL075G065W2	650	75	1.45	3 Level	W2
TL100G065W2	650	100	1.90	3 Level	W2
TL150G065W2	650	150	1.37	3 Level	W2
PA050G065W2	650	50	1.35	3 Phase Bridge+Brake+Rectifer	W2
PA025G120W2	1200	25	1.75	3 Phase Bridge+Brake+Rectifer	W2
PA035G120W2	1200	35	1.70	3 Phase Bridge+Brake+Rectifer	W2
PA040G120W2	1200	40	1.71	3 Phase Bridge+Brake+Rectifer	W2
PA050G120W2	1200	50	1.70	3 Phase Bridge+Brake+Rectifer	W2
SA050G120W2	1200	50	1.71	Sixpack	W2
SA075G120W2	1200	75	1.70	Sixpack	W2
SA100G120W2	1200	100	1.72	Sixpack	W2

产品型号 Part Number	Vdss (V)	Rds（on） Tj=25℃(mΩ)	电路拓扑结构 Configruation	封装 Housing
DA04C120W2	1200	3.52	Half Bridge	W2
DA08C120W2	1200	7.65	Half Bridge	W2
SA14C120W2	1200	13.92	Sixpack	W2

外型尺寸图 Outline Dimension

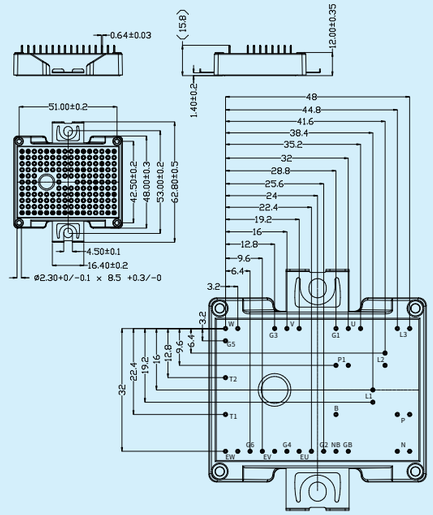

PA series

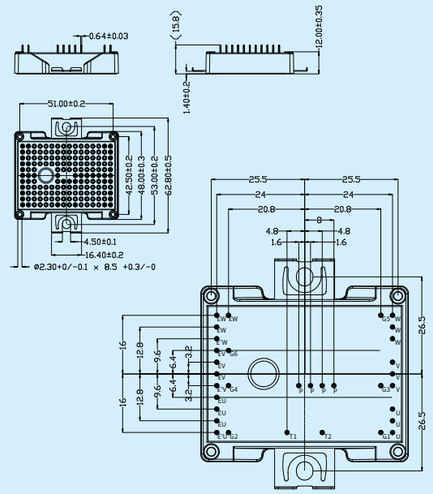

SA series

拓扑 Circuit Diagram

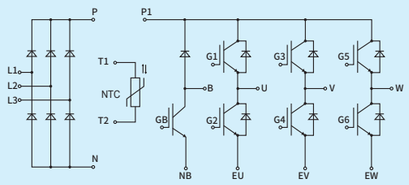

PA series

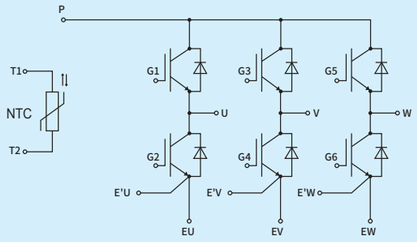

SA series

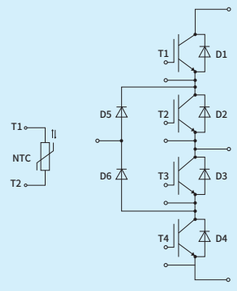

TL series

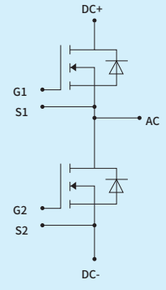

DA series

EconoPIM2

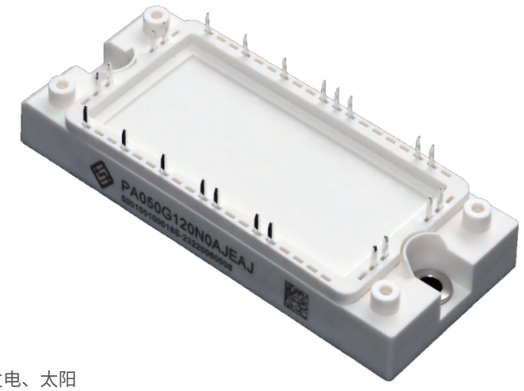

PA 系列 (PA series: 3 Phase Bridge+Brake+Rectifier)
PB 系列 (PB series: 3 Phase Bridge+Rectifier)
SA 系列 (SA series: Sixpack)

额定电压 Rated Voltage: 650V / 1200V
电流范围 Current Range: 25A / 35A / 40A / 50A / 75A / 100A

行业应用 Applications

工业变频器、工业伺服、不间断电源 UPS、电焊机、感应加热、风力发电、太阳能光伏、轨道交通等

Frequency converters, Industrial servo controller, Uninterrupted power supply (UPS), Inverter welder, Induction heater, Wind power, PV solar, Rail Transit, etc.

产品型号 Part Number	Vces (V)	Ic (A)	Vce(sat) Tj=25 °C (V)	电路拓扑结构 Configruation	封装 Housing
PA050G065N0	650	50	1.75	3 Phase Bridge+Brake+Rectifer	N2
PA050G065N2	650	50	1.68	3 Phase Bridge+Brake+Rectifer	N2
PA050G065N3	650	50	1.40	3 Phase Bridge+Brake+Rectifer	N3
PA075G065N3	650	75	1.69	3 Phase Bridge+Brake+Rectifer	N3
PA025G120N0	1200	25	1.75	3 Phase Bridge+Brake+Rectifer	N0
PA025G120N2	1200	25	1.75	3 Phase Bridge+Brake+Rectifer	N2
PA035G120N0	1200	35	1.52	3 Phase Bridge+Brake+Rectifer	N0
PA040G120N2	1200	40	1.58	3 Phase Bridge+Brake+Rectifer	N2
PA050G120N0	1200	50	1.70	3 Phase Bridge+Brake+Rectifer	N0
PA050G120N2	1200	50	1.70	3 Phase Bridge+Brake+Rectifer	N2
PA075G120N3	1200	75	1.70	3 Phase Bridge+Brake+Rectifer	N3
PA100G120N3	1200	100	1.72	3 Phase Bridge+Brake+Rectifer	N3
PB050G120N0	1200	50	1.70	3 Phase Bridge+Rectifer	N0
PB075G120N3	1200	75	1.85	3 Phase Bridge+Rectifer	N3
SA050G120N1	1200	50	1.70	Sixpack	N1
SA075G120N1	1200	75	1.54	Sixpack	N1
SA100G120N1	1200	100	1.85	Sixpack	N1
FA075F120N4	1200	75	2.15	Fourpack	N4

外型尺寸图 Outline Dimension

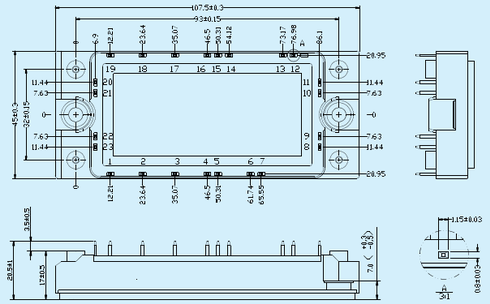

PA, PB series

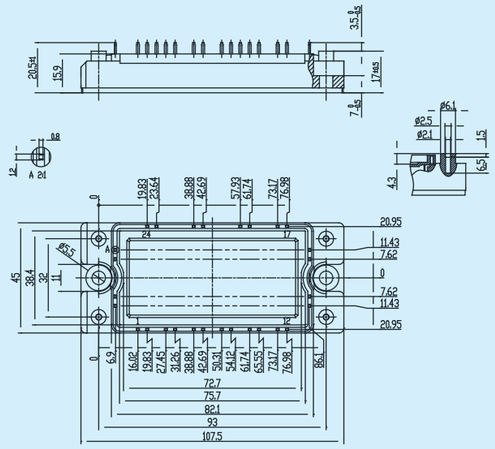

SA series

拓扑 Circuit Diagram

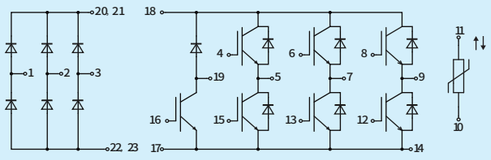

PA series

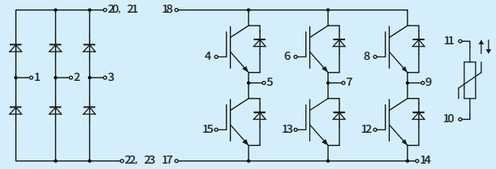

PB series

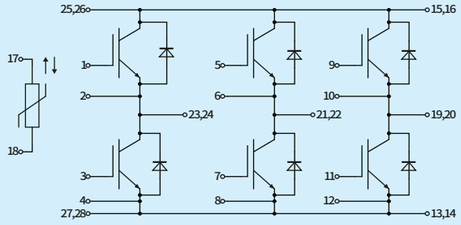

SA series

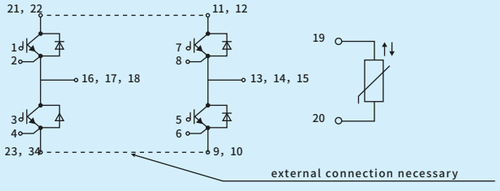

FA series

EconoPIM3

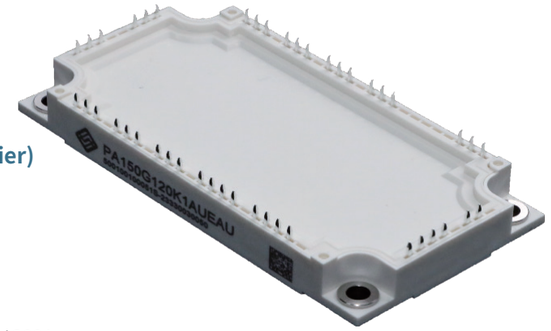

PA 系列 (PA series: 3 Phase Bridge+Brake+Rectifier)
PB 系列 (PB series: 3 Phase Bridge+Rectifier)
SA 系列 (SA series: Sixpack)
FB 系列 (FB series: Fourpack+Rectifier)
FA 系列 (FA series: Fourpack)

额定电压 Rated Voltage: 650V / 750V / 1200V / 1700V
电流范围 Current Range: 50A / 75A / 100A / 150A / 200A / 275A / 300A

行业应用 Applications

工业变频器、工业伺服、不间断电源 UPS、电焊机、感应加热、风力发电、太阳能光伏、轨道交通、新能源汽车

Frequency converters, Industrial servo controller, Uninterrupted power supply (UPS), Inverter welder, Induction heater, Wind power, PV solar, Rail Transit, New energy vehicles, etc.

产品型号 Part Number	Vces (V)	Ic (A)	Vce(sat) Tj=25 °C (V)	电路拓扑结构 Configruation	封装 Housing
PA075G065K0	650	75	1.67	3 Phase Bridge+Brake+Rectifer	K0
PA075G065K3	650	75	1.63	3 Phase Bridge+Brake+Rectifer	K3
PA100G065K3	650	100	1.19	3 Phase Bridge+Brake+Rectifer	K3
PA200G065K1	650	200	1.37	3 Phase Bridge+Brake+Rectifer	K1
PB200G065K1	650	200	1.37	3 Phase Bridge+Brake+Rectifer	K1
PA050G120K0	1200	50	1.67	3 Phase Bridge+Brake+Rectifer	K0
PA050G120K3	1200	50	1.67	3 Phase Bridge+Brake+Rectifer	K3
PA075G120K0	1200	75	1.54	3 Phase Bridge+Brake+Rectifer	K0
PA075G120K3	1200	75	1.54	3 Phase Bridge+Brake+Rectifer	K3
PA100G120K0	1200	100	1.84	3 Phase Bridge+Brake+Rectifer	K0
PA150G120K1	1200	150	1.45	3 Phase Bridge+Brake+Rectifer	K1
PA200G120K2	1200	200	1.59	3 Phase Bridge+Brake+Rectifer	K2
PB075G120K0	1200	75	1.54	3 Phase Bridge+Rectifer	K0
PB100G120K0	1200	100	1.84	3 Phase Bridge+Rectifer	K0
PB150G120K1	1200	150	1.45	3 Phase Bridge+Rectifer	K1
FA150G120K5	1200	150	1.54	Fourpack	K5
FB075G170K4	1700	75	1.80	Fourpack+Rectifer	K4
FB150G170K4	1700	150	1.80	Fourpack+Rectifer	K4
FB200G170K4	1700	200	1.92	Fourpack+Rectifer	K4
SA100G065K6	650	100	1.20	Sixpack	K6
SA200G065K6	650	200	1.37	Sixpack	K6
SA300G065K7	650	300	1.54	Sixpack	K7
SA075G120K6	1200	75	1.54	Sixpack	K6
SA100G120K6	1200	100	1.84	Sixpack	K6
SA150G120K6	1200	150	1.45	Sixpack	K6
SA200G120K6	1200	200	1.59	Sixpack	K6
SA200G120K7	1200	200	1.59	Sixpack	K7
SA300G120K7	1200	300	1.80	Sixpack	K7
SA075G170K6	1700	75	1.79	Sixpack	K6
SA100G170K6	1700	100	1.80	Sixpack	K6
SA150G170K6	1700	150	1.75	Sixpack	K6

外型尺寸图 Outline Dimension

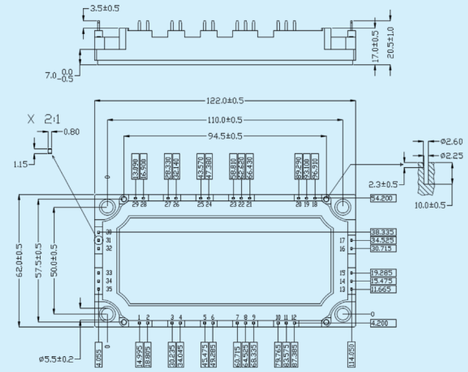

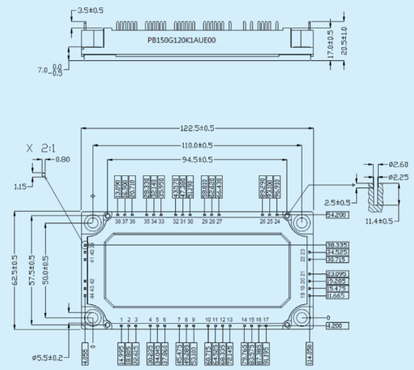

拓扑 Circuit Diagram

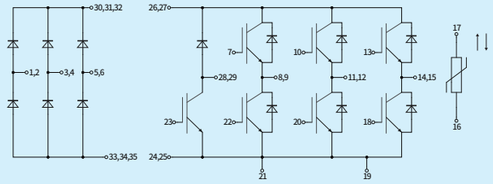

PA PB series

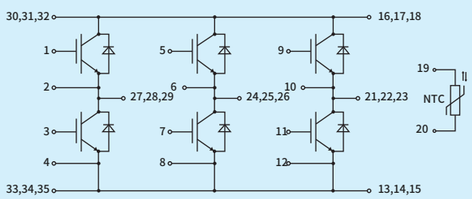

SA series (K6)

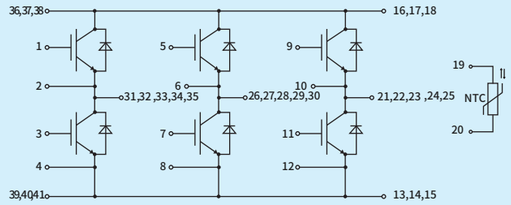

SA series (K7)

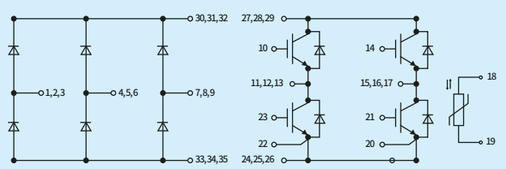

FB series (K4)

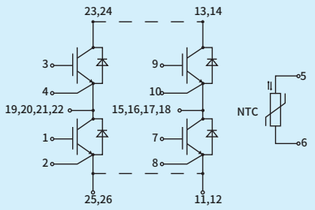

FA series (K5)

Y34mm



DB 系列 (DB series: Half Bridge without NTC)

额定电压 Rated Voltage: 650V / 1200V / 1700V
电流范围 Current Range: 50A / 75A / 100A / 150A / 200A / 225A / 300A

行业应用 Applications

工业变频器、电焊机、感应加热、不间断电源 UPS、电机制动、太阳能光伏

Frequency converters, Inverter welder, Induction heater, Uninterrupted power supply (UPS), Motor control, PV solar.

产品型号 Part Number	Vces (V)	Ic (A)	Vce(sat) Tj=25 °C (V)	电路拓扑结构 Configruation	封装 Housing
DB075G065T1	650	75	1.42	Half Bridge	T1
DB100G065T1	650	100	1.35	Half Bridge	T1
DB150G065T1	650	150	1.37	Half Bridge	T1
DB200G065T1	650	200	1.40	Half Bridge	T1
DB300G065T1	650	300	1.31	Half Bridge	T1
DB225F065T1	650	225	1.26	Half Bridge	T1
DB050G120T1	1200	50	1.71	Half Bridge	T1
DB075G120T1	1200	75	1.63	Half Bridge	T1
DB100G120T1	1200	100	1.86	Half Bridge	T1
DB150G120T1	1200	150	1.45	Half Bridge	T1
DB200G120T1	1200	200	1.62	Half Bridge	T1
DB075F120T1	1200	75	2.15	Half Bridge	T1
DB100F120T1	1200	100	1.92	Half Bridge	T1
DB150F120T1	1200	150	2.10	Half Bridge	T1
DB075G170T1	1700	75	1.78	Half Bridge	T1
DB100G170T1	1700	100	1.66	Half Bridge	T1
DB150G170T1	1700	150	1.81	Half Bridge	T1

外型尺寸图 Outline Dimension

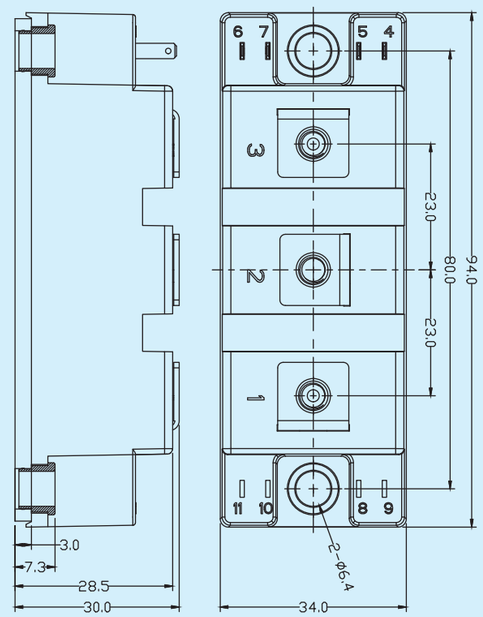

拓扑 Circuit Diagram

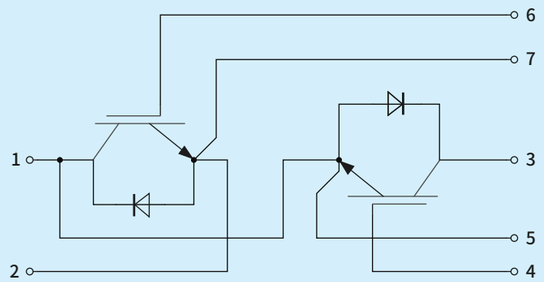

Y45mm

DB 系列 (DB series: Half Bridge without NTC)

额定电压 Rated Voltage: 650V / 1200V
电流范围 Current Range: 150A / 200A / 300A / 400A / 450A

行业应用 Applications

储能、风力发电、工业变频器、不间断电源 UPS、功率电源、可再生能源

Energy storage, Wind power converter, Frequency converters, Uninterrupted power supply (UPS), Active filters, Renewable energy



产品型号 Part Number	Vces (V)	Ic (A)	Vce(sat) Tj=25 °C (V)	电路拓扑结构 Configuration	封装 Housing
DB150G065T4	650	150	1.41	Half Bridge	T4
DB200G065T4	650	200	1.35	Half Bridge	T4
DB300G065T4	650	300	1.71	Half Bridge	T4
DB400G065T4	650	400	1.38	Half Bridge	T4
DB150G120T4	1200	150	1.45	Half Bridge	T4
DB200G120T4	1200	200	1.42	Half Bridge	T4
DB300G120T4	1200	300	1.57	Half Bridge	T4

外型尺寸图 Outline Dimension

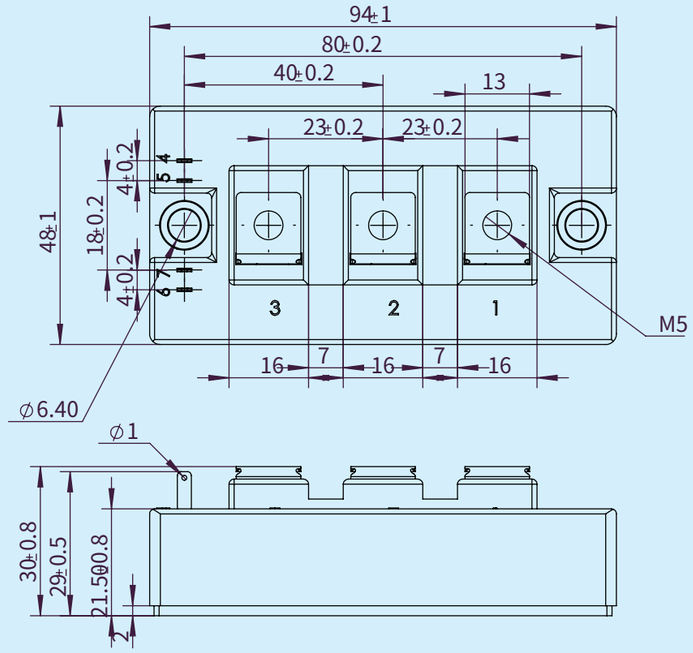

拓扑 Circuit Diagram

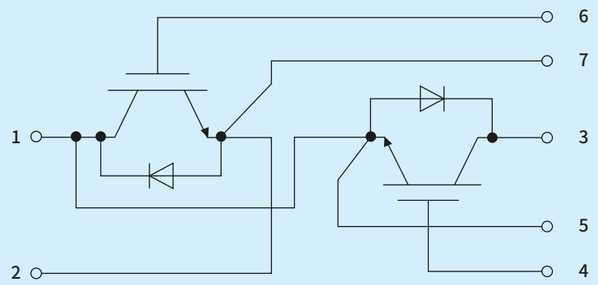

Y62mm



DB 系列 (DB series: Half Bridge without NTC)

额定电压 Rated Voltage: 650V / 1200V / 1700V
电流范围 Current Range: 150A / 200A / 300A / 400A / 450A / 600A / 800A

DB 系列 碳化硅 (DB series: Sixpack SiC)

额定电压 Rated Voltage: 1200V
导通阻抗 Rds（on）Tc =25°C: 3.50mΩ / 3.13 mΩ / 3.80 mΩ

行业应用 Applications

储能、风力发电、工业变频器、不间断电源 UPS、功率电源、可再生能源、电源质量 APF、SVG 等

Energy storage, Wind power converter, Frequency converters, Uninterrupted power supply (UPS), Active filters, Renewable energy, Active Power Filter (APF) , Static VAR Generator (SVG), etc.

产品型号 Part Number	Vces (V)	Ic (A)	Vce(sat) Tj=25 °C (V)	电路拓扑结构 Configruation	封装 Housing
DB150G065T0	650	150	1.37	Half Bridge	T0
DB200G065T0	650	200	1.36	Half Bridge	T0
DB400G065T0	650	400	1.40	Half Bridge	T0
DB600G065T0	650	600	2.00	Half Bridge	T0
DB800G065T0	650	800	2.01	Half Bridge	T0
DB300F065T0	650	300	2.18	Half Bridge	T0
DB150G120T0	1200	150	1.43	Half Bridge	T0
DB200G120T0	1200	200	1.63	Half Bridge	T0
DB300G120T0	1200	300	1.55	Half Bridge	T0
DB450G120T0	1200	450	1.45	Half Bridge	T0
DB600G120T0	1200	600	1.45	Half Bridge	T0
DB200F120T0	1200	200	2.05	Half Bridge	T0
DB300F120T0	1200	300	2.19	Half Bridge	T0
DB400F120T0	1200	400	2.27	Half Bridge	T0
DB300B120T0	1200	300	1.55	Half Bridge	T0
DB450B120T0	1200	450	1.45	Half Bridge	T0
DB600B120T0	1200	600	1.45	Half Bridge	T0
DB150G170T0	1700	150	1.58	Half Bridge	T0
DB200G170T0	1700	200	1.65	Half Bridge	T0
DB300G170T0	1700	300	1.90	Half Bridge	T0
DB450G170T0	1700	450	1.91	Half Bridge	T0
DB600G170T0	1700	600	1.72	Half Bridge	T0

产品型号 Part Number	Vdss (V)	Rds（on） Tj=25°C（mΩ）	电路拓扑结构 Configruation	封装 Housing
DB04C120T0	1200	3.50	Half Bridge	T0
DB03C120T0	1200	3.13	Half Bridge	T0
CE04C120T0	1200	3.80	Contralateral tube	T0

外型尺寸图 Outline Dimension

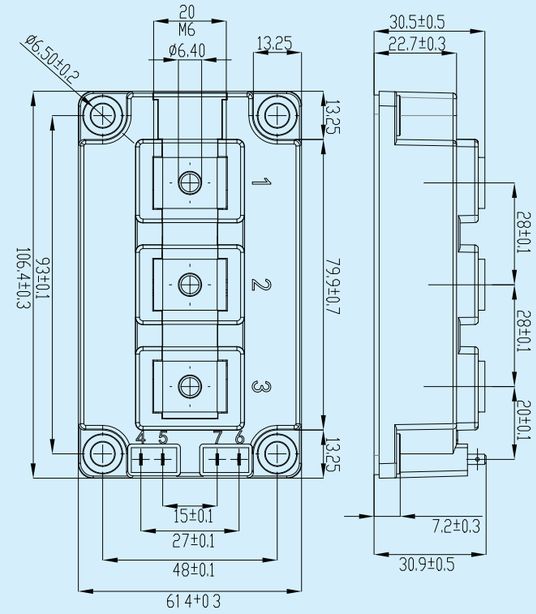

拓扑 Circuit Diagram

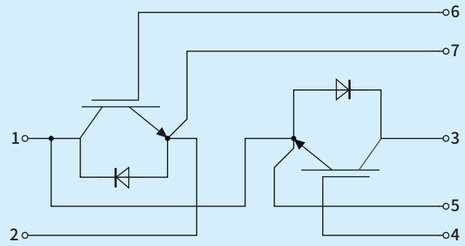

IGBT Series

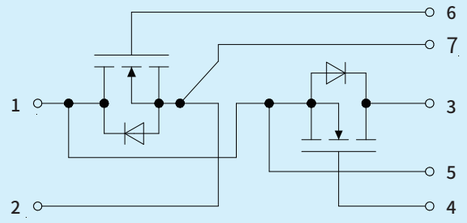

SiC Series

EconoDual3

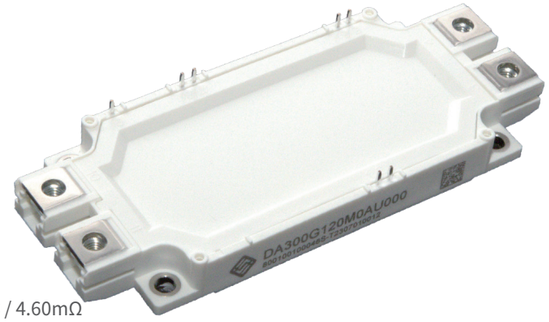

DA 系列 (DA series: Dual/Half Bridge)

额定电压 Rated Voltage: 650V / 1200V / 1700V
电流范围 Current Range: 150A / 300A / 450A / 600A / 800A / 900A

DA 系列 碳化硅 (DA series SiC: Dual/Half Bridge)

额定电压 Rated Voltage: 1200V / 1700V
导通阻抗 Rds（on）Tc =25°C: 1.55mΩ / 2.30mΩ / 4.70mΩ / 1.70mΩ / 4.60mΩ

行业应用 Applications

工业变频器、工业伺服、不间断电源 UPS、感应加热、储能、风力发电、太阳能光伏、轨道交通、新能源汽车

Frequency converters, Industrial servo controller, Uninterrupted power supply (UPS), Induction heater, Energy storage, Wind power, PV solar, Rail Transi, New energy vehicles, etc.

产品型号 Part Number	Vces (V)	Ic (A)	Vce(sat) Tj=25 °C (V)	电路拓扑结构 Configruation	封装 Housing
DA300G065M0	650	300	1.85	Half Bridge（NTC）	M0
DA450G065M0	650	450	1.42	Half Bridge（NTC）	M0
DA600G065M0	650	600	1.91	Half Bridge（NTC）	M0
DA600B065M0	650	600	1.91	Half Bridge（NTC）	M0
DA600F065M0	650	600	2.00	Half Bridge（NTC）	M0
DA300G120M0	1200	300	1.55	Half Bridge（NTC）	M0
DA450G120M0	1200	450	1.50	Half Bridge（NTC）	M0
DA600G120M0	1200	600	1.70	Half Bridge（NTC）	M0
DA900G120M0	1200	900	1.80	Half Bridge（NTC）	M0
DA450B120M0	1200	450	1.50	Half Bridge（NTC）	M0
DA600B120M0	1200	600	1.70	Half Bridge（NTC）	M0
DA900B120M0	1200	900	1.80	Half Bridge（NTC）	M0
DA150G170M0	1700	150	1.58	Half Bridge（NTC）	M0
DA300G170M0	1700	300	1.65	Half Bridge（NTC）	M0
DA450G170M0	1700	450	1.65	Half Bridge（NTC）	M0
DA600G170M0	1700	600	1.72	Half Bridge（NTC）	M0
DA300B170M0	1700	300	1.65	Half Bridge（NTC）	M0
DA450B170M0	1700	450	1.65	Half Bridge（NTC）	M0
DA600B170M0	1700	600	1.72	Half Bridge（NTC）	M0
DA900B170M0	1700	900	1.81	Half Bridge（NTC）	M0

产品型号 Part Number	Vdss (V)	Rds（on） Tj=25°C(mΩ)	电路拓扑结构 Configruation	封装 Housing
DA02C120M0	1200	1.55	Half Bridge（NTC）	M0
DA03C120M0	1200	2.30	Half Bridge（NTC）	M0
DA05C120M0	1200	4.70	Half Bridge（NTC）	M0
DA02C170M0	1700	1.70	Half Bridge（NTC）	M0
DA05C170M0	1700	4.60	Half Bridge（NTC）	M0

外型尺寸图 Outline Dimension

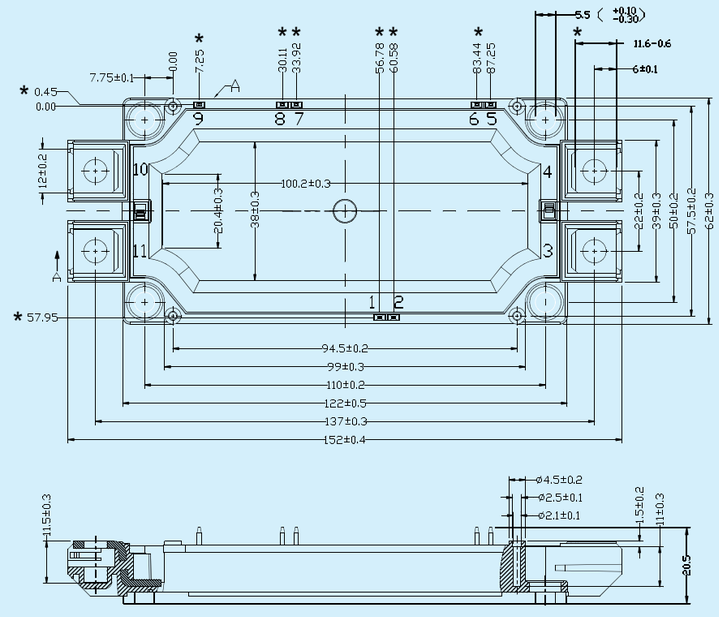

拓扑 Circuit Diagram

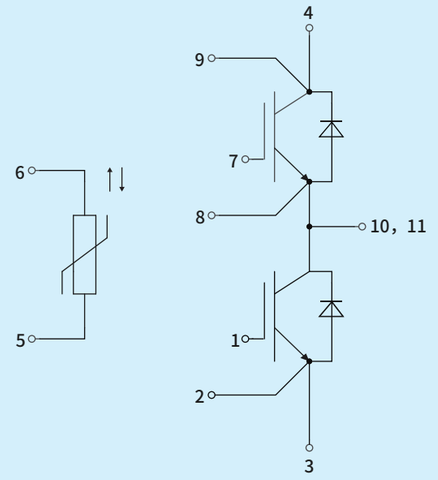

IGBT Series

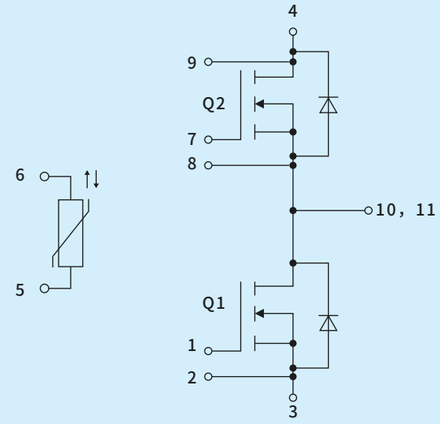

SiC Series

Hybrid Pack4

SA 系列 (SA series: Sixpack)

额定电压 Rated Voltage: 650V / 1200V
电流范围 Current Range: 150A / 200A

行业应用 Applications

工业变频器、不间断电源 UPS、感应加热、功率电源、
电能质量、储能、风力发电、太阳能光伏、轨道交通

Frequency converters, Uninterrupted power supply (UPS),
Induction heater, Inverter welder, Power quality solutions,
Energy storage, Wind power, PV solar, Rail Transit, etc.

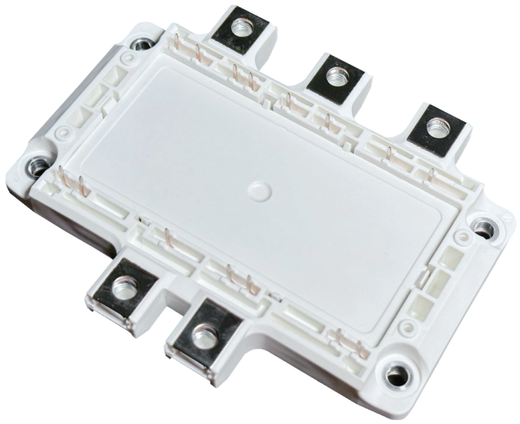

产品型号 Part Number	Vces (V)	Ic (A)	Vce(sat) Tj=25 °C (V)	电路拓扑结构 Configruation	封装 Housing
SA200G065A2	650	200	1.38	Sixpack	A2
SA150G120A2	1200	150	1.46	Sixpack	A2
SA200G120A2	1200	200	1.59	Sixpack	A2

外型尺寸图
Outline Dimension

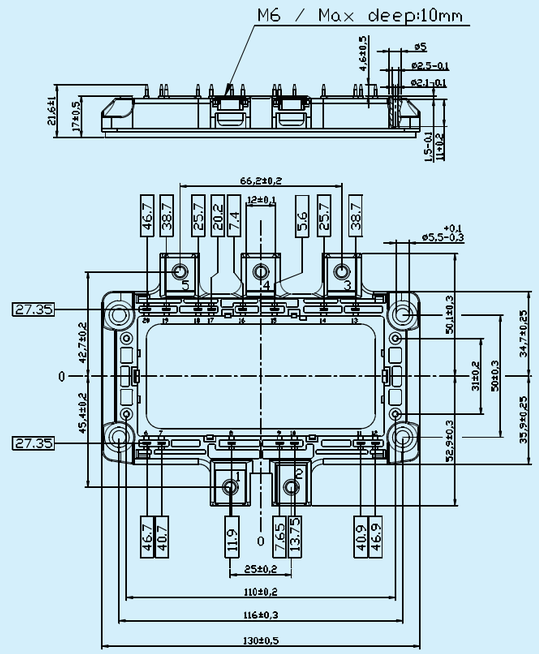

拓扑
Circuit Diagram

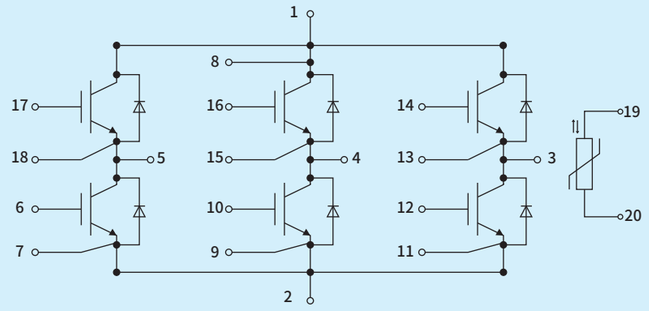

Hybrid Pack1

SA 系列 (SA series: Sixpack)

额定电压 Rated Voltage: 650V / 750V / 1200V
电流范围 Current Range: 200A / 400A / 550A

SA 系列 碳化硅 (SA series SiC: Sixpack)

额定电压 Rated Voltage: 1200V
导通阻抗 Rds（on）Tc =25°C: 2.39mΩ

行业应用 Applications

工业变频器、不间断电源 UPS、感应加热、功率电源、电能质量、储能、风力发电、太阳能光伏、轨道交通

Frequency converters, Uninterrupted power supply (UPS), Induction heater, Inverter welder, Power quality solutions, Energy storage, Wind power, PV solar, Rail Transit, etc.

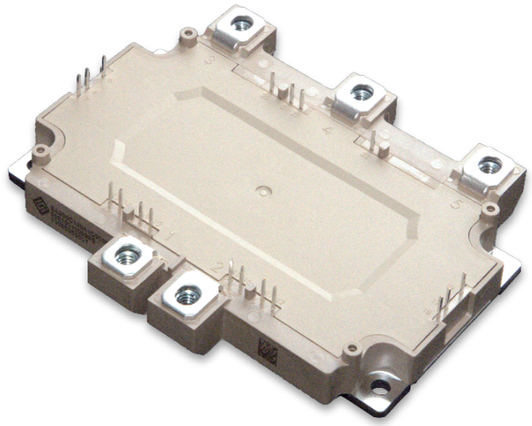

产品型号 Part Number	Vces (V)	Ic (A)	Vce(sat) Tj=25 °C (V)	电路拓扑结构 Configruation	封装 Housing
SA200G065A1	650	200	1.37	Sixpack	A1
SA400G065A1	650	400	1.38	Sixpack	A1
SA550G075A1	750	550	1.48	Sixpack	A1
SA400G120A1	1200	400	1.60	Sixpack	A1

产品型号 Part Number	Vdss (V)	Rds（on） Tj=25°C(mΩ)	电路拓扑结构 Configruation	封装 Housing
SA03C120A1	1200	2.39	Sixpack	A1

外型尺寸图
Outline Dimension

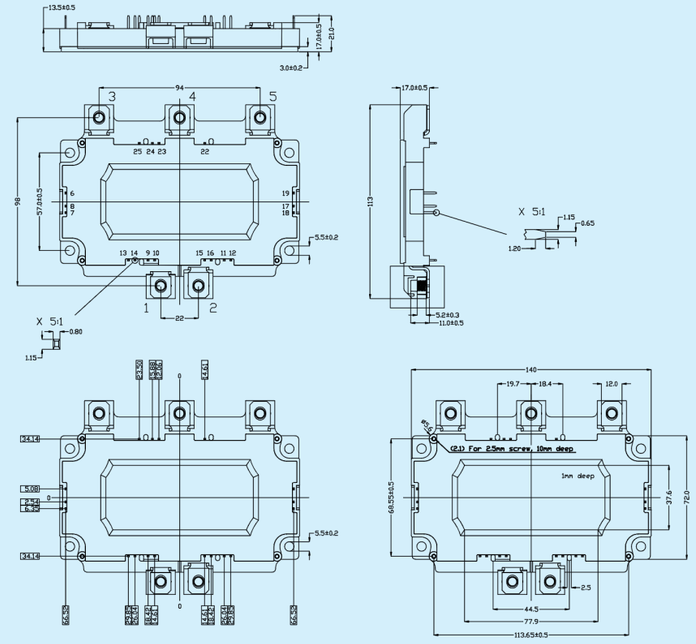

拓扑
Circuit Diagram

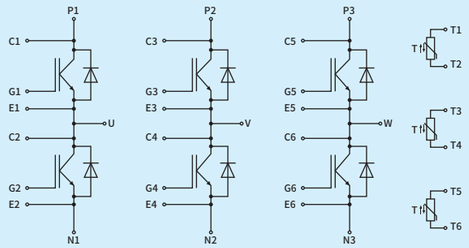

IGBT Series

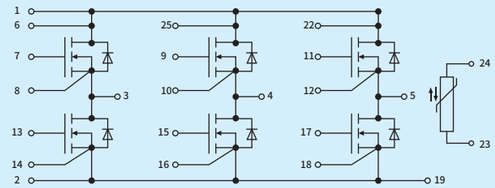

SiC Series

Hybrid Pack Drive

SA 系列 (SA series: Sixpack)

额定电压 Rated Voltage: 750V / 1200V
电流范围 Current Range: 400A / 450A / 500A / 600A / 820A

SA 系列 碳化硅 (SA series SiC: Sixpack)

额定电压 Rated Voltage: 1200V
导通阻抗 Rds（on）Tc =25°C: 1.75mΩ / 2.50mΩ

行业应用 Applications

不间断电源 UPS、电能质量、储能、风力发电、太阳能光伏、轨道交通、新能源汽车

Uninterrupted power supply (UPS), Power quality solutions, Energy storage, Wind power, PV solar, Rail Transit, New energy vehicles, etc.

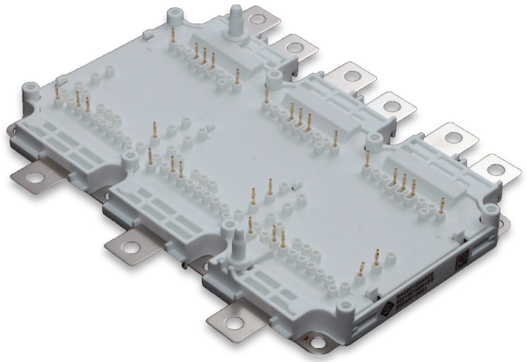

产品型号 Part Number	Vces (V)	Ic (A)	Vce(sat) Tj=25 °C (V)	电路拓扑结构 Configruation	封装 Housing
SA550G075A0	750	550	1.21	Sixpack	A0
SA600G075A0	750	600	1.20	Sixpack	A0
SA820G075A0	750	820	1.28	Sixpack	A0
SA450G120A0	1200	450	1.51	Sixpack	A0
SA600G120A0	1200	600	1.70	Sixpack	A0

产品型号 Part Number	Vdss (V)	Rds（on） Tj=25°C(mΩ)	电路拓扑结构 Configruation	封装 Housing
SA02C120A0	1200	1.75	Sixpack	A0
SA03C120A0	1200	2.50	Sixpack	A0

外型尺寸图
Outline Dimension

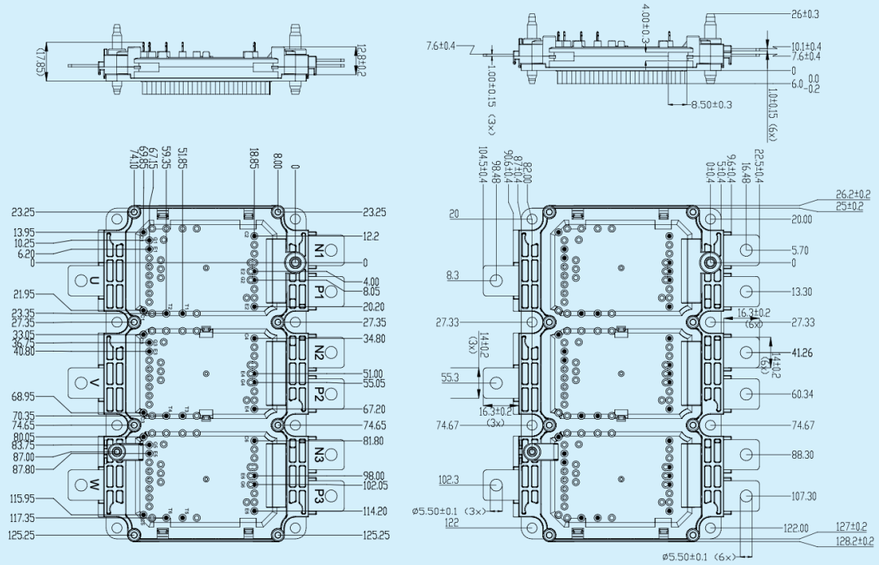

拓扑
Circuit Diagram

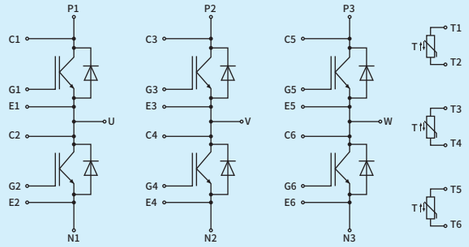

IGBT Series

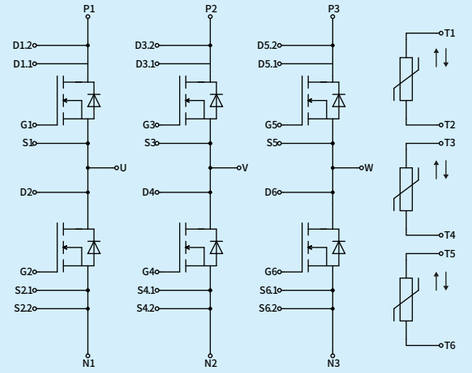

SiC Series

DCM-1000

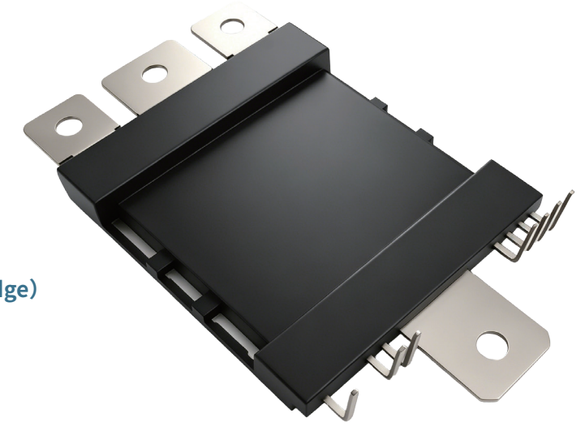

DA 系列 (DA series : Half Bridge)

额定电压 Rated Voltage: 750V / 1200V
电流范围 Current Range: 450A / 820A

DA 系列 碳化硅 (DA series SiC: Dual/Half Bridge)

额定电压 Rated Voltage: 1200 V
导通阻抗 Rds（on）Tc =25°C: 1.86mΩ

行业应用 Applications

工业变频器、功率电源、储能、太阳能光伏、新能源汽车
Frequency converters, Active filters, Energy storage, PV solar,
New energy vehicles, etc.

产品型号 Part Number	Vces (V)	Ic (A)	Vce(sat) Tj=25 °C (V)	电路拓扑结构 Configruation	封装 Housing
DA820G075C0	750	820	1.46	Half Bridge	C0
DA450G120C0	1200	450	1. 59	Half Bridge	C0
产品型号 Part Number	**Vdss (V)**	**Rds（on） Tj=25℃(mΩ)**		**电路拓扑结构 Configruation**	**封装 Housing**
DA02C120C0	1200	1.86		Half Bridge	C0

外型尺寸图
Outline Dimension

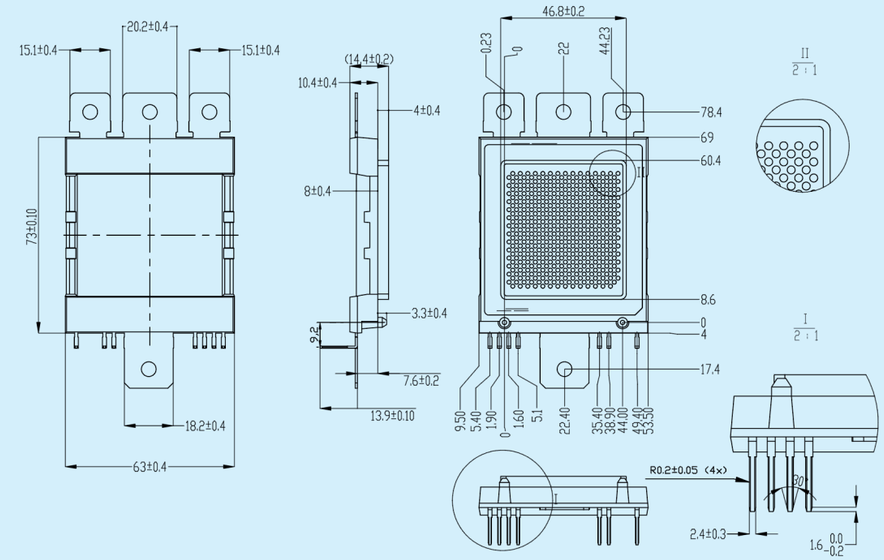

拓扑
Circuit Diagram

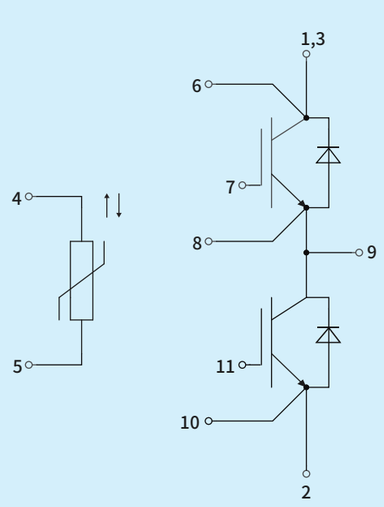

IGBT Series

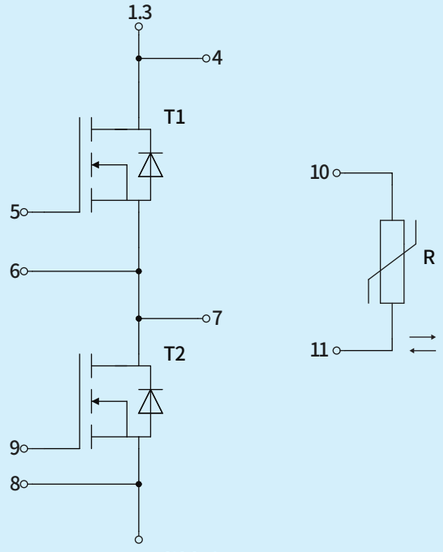

SIC Series

EASY 3B

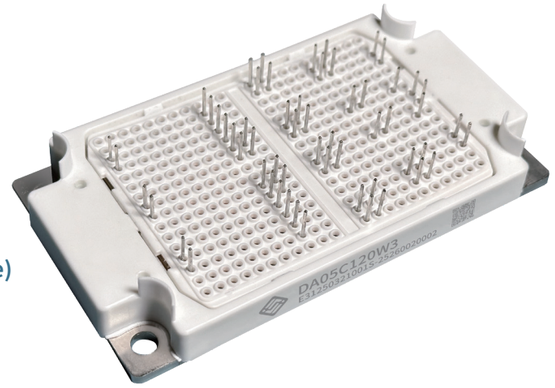

TL 系列 (TL series：3 Level)

额定电压 Rated Voltage: 1000V
电流范围 Current Range: 400A

DA 系列 碳化硅 (DA series SiC: Dual/Half Bridge)

额定电压 Rated Voltage: 1200V
导通阻抗 Rds（on）Tc =25°C: 5.30mΩ

行业应用　Applications

高频开关应用、不间断电源 UPS、储能、太阳能光伏、新能源汽车

High Frequency Switching Application, Uninterrupted power supply (UPS) , Energy storage, PV solar, New energy vehicles, etc.

产品型号 Part Number	Vces (V)	Ic (A)	Vce(sat) Tj=25 °C (V)	电路拓扑结构 Configuration	封装 Housing
TL400G100W3	1000	400	1.60	3 Level	W3

产品型号 Part Number	Vdss (V)	Rds（on） Tj=25℃(mΩ)	电路拓扑结构 Configuration	封装 Housing
DA05C120W3	1200	5.30	Half Bridge	W3

外型尺寸图 Outline Dimension

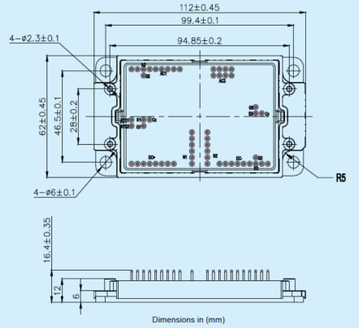

IGBT Series

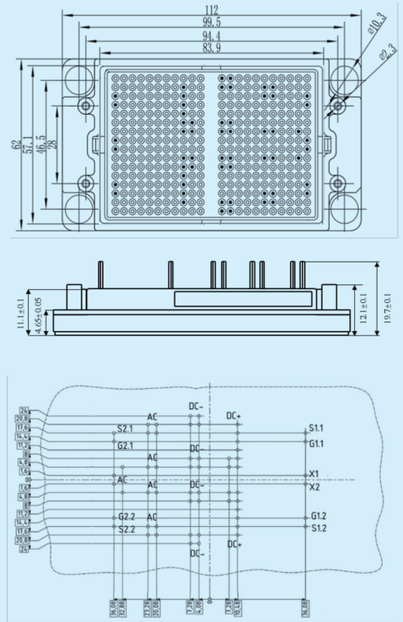

SiC Series

拓扑 Circuit Diagram

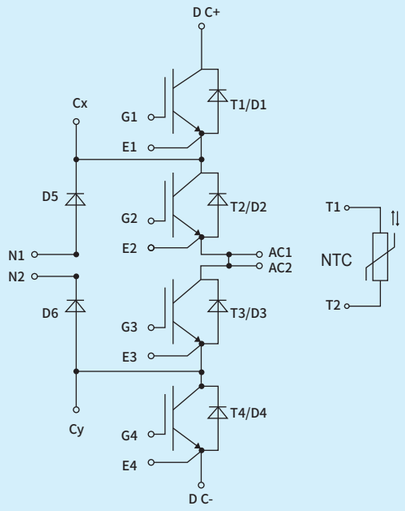

IGBT Series

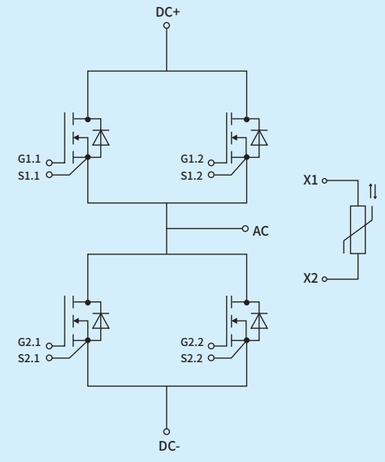

SiC Series

EASY 4B

DA 系列 (DA series：Dual/Half Bridge)

额定电压 Rated Voltage: 1000V
电流范围 Current Range: 600A

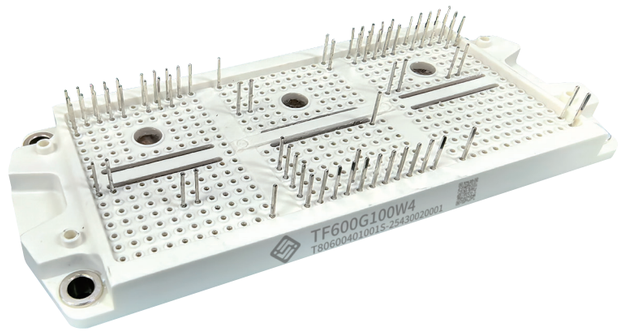

行业应用 Applications

辅助逆变器、高功率转换器、电机驱动、风力涡轮机

Auxiliary Inverters，High power converters，Motor Drives, wind turbine

产品型号 Part Number	Vces (V)	Ic (A)	Vce(sat) Tj=25 °C (V)	电路拓扑结构 Configruation	封装 Housing
TF600G100W4	1000	600	1.60	3 Level	W4

外型尺寸图
Outline Dimension

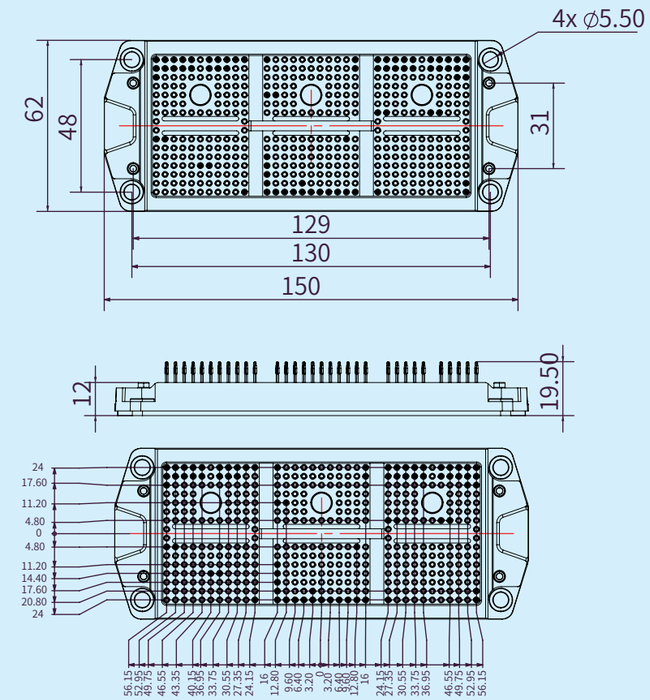

拓扑
Circuit Diagram

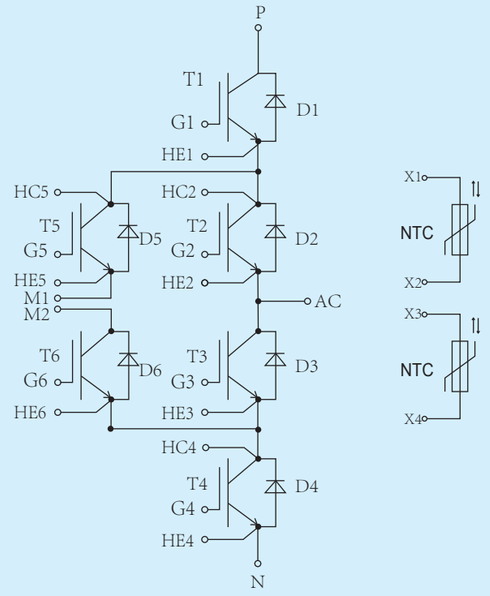

P89

DA 系列 (DA series：Dual/Half Bridge)

额定电压 Rated Voltage: 1700V
电流范围 Current Range: 1400A

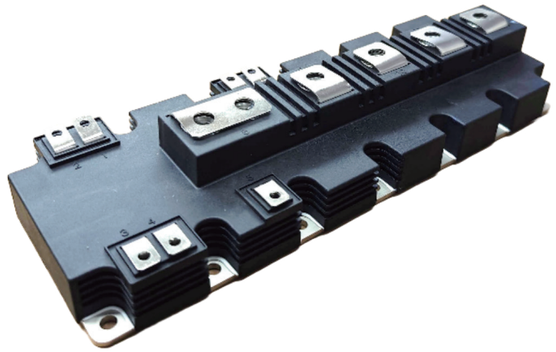

行业应用 Applications

辅助逆变器、高功率转换器、电机驱动、风力涡轮机
Auxiliary Inverters, High power converters, Motor Drives, wind turbine.

产品型号 Part Number	Vces (V)	Ic (A)	Vce(sat) Tj=25 °C (V)	电路拓扑结构 Configuration	封装 Housing
DA1K4G170T8	1700	1400	1.65	Half Bridge	T8

外型尺寸图
Outline Dimension

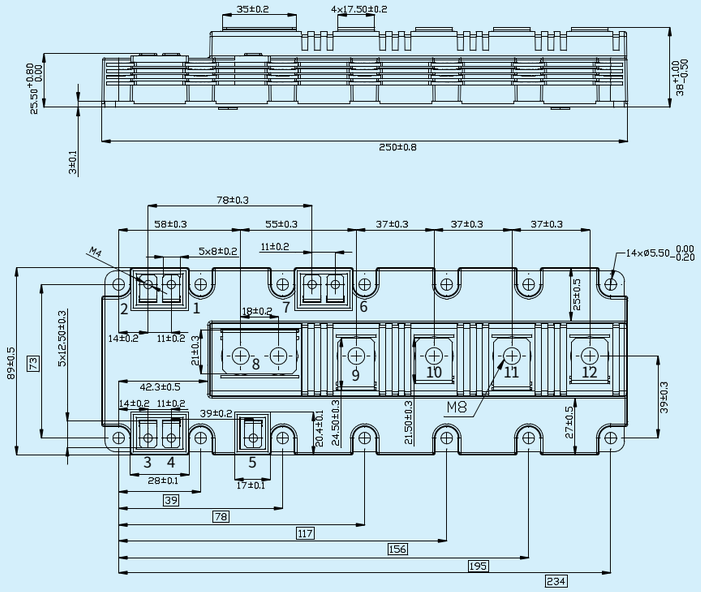

拓扑
Circuit Diagram

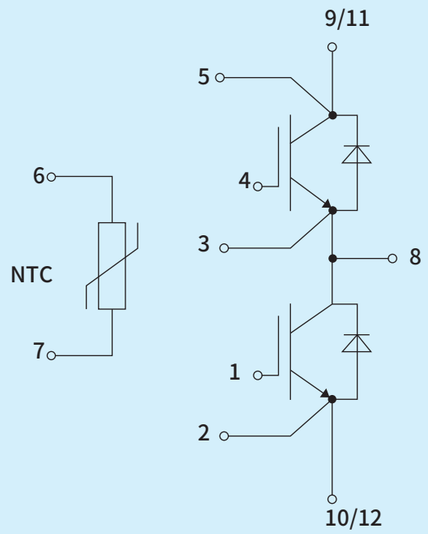

DISCRETE

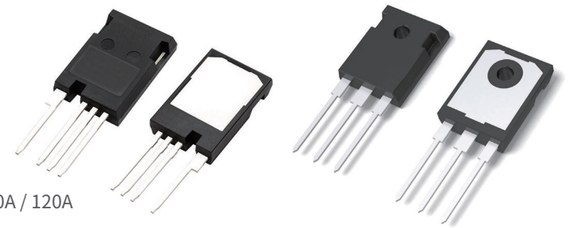

分立器件 (Discrete Device：Single Switch)

额定电压 Rated Voltage: 650V / 750V / 1200V / 1700V
电流范围 Current Range: 10A / 15A / 25A / 40A / 50A / 75A / 100A / 120A

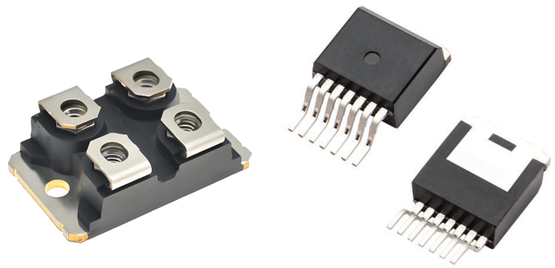

行业应用 Applications

工业驱动、太阳能光伏、电机驱动、开关电源
Industrial Drives, PV solar, Motor Drives, Switch power supplies

产品型号 Part Number	Vces (V)	Ic/Rds (on)	封装类型
ZA030C065ZA	650	30mΩ	TO 247-4L
ZA050G120WA	1200	50A	TO 247P-3L
ZA075G065WA	650	75A	TO 247-3L
ZA075G065WC	650	75A	TO 247-3L
M025C075ZC	750	25mΩ	TO 247-4L
M040G075WC	750	40A	TO 247-3L
ZA025G120WC	1200	25A	TO 247-3L
ZA050G120WC	1200	50A	TO 247P-3L
ZA019C170ZC	1700	19mΩ	TO 247B-4L
ZA006C120YT	1200	6mΩ	TO 247P-4L
ZA050G170QT	1700	50A	TO 247P-3L

外型尺寸图
Outline Dimension

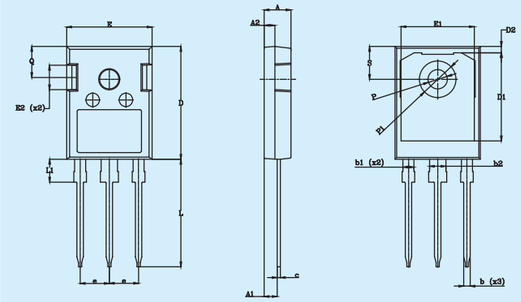

TO 247-3L

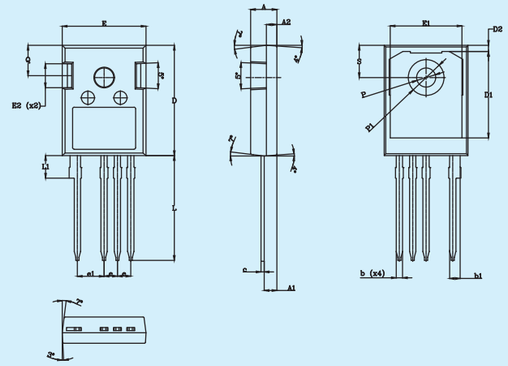

TO 247-4L

拓扑
Circuit Diagram

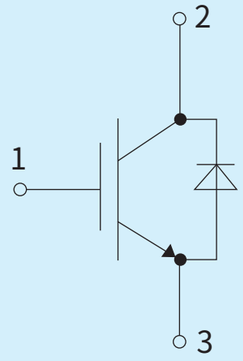

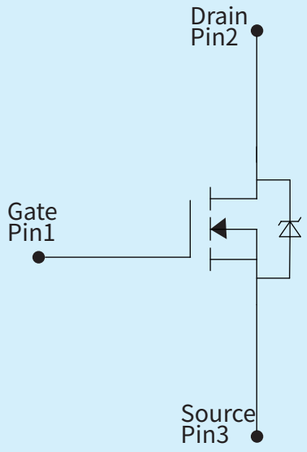

Intelligent Power Module

SA系列 (SA series：3 Phase Bridge)

额定电压 Rated Voltage: 600V / 650V
电流范围 Current Range: 6A / 10A / 15A / 20A/ 30A

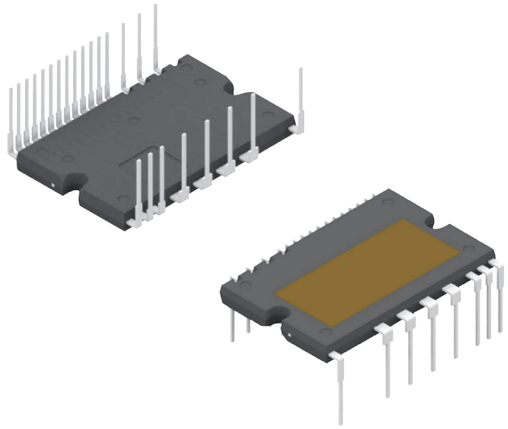

SA系列 碳化硅 (SA series SiC：3 Phase Bridge)

额定电压 Rated Voltage: 600V / 650V
导通阻抗 Rds(on) Tc =25°C: 180mΩ/300mΩ

行业应用

冰箱压缩机
空调压缩机
小型功率变频器
伺服驱动器
电机控制器
通用逆变器

Applications

Compressor for the refrigerator
Compressor for air conditioning
Small power frequency converters
servo drive
motor controls
purpose inverte

产品型号 Part Number	Vdss (V)	Rds(on) Tc=25°C (mΩ)	电路拓扑结构 Configruation	封装 Housing
SA300C060P0	600V	300mΩ	3 Phase Bridge	SOP 23
SA180C060P0	600V	180mΩ	3 Phase Bridge	SOP 23

外型尺寸图 Outline Dimension

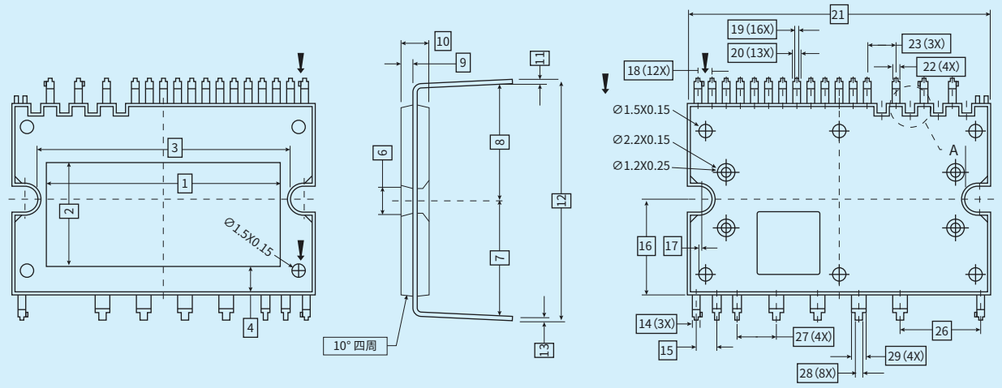

拓扑 Circuit Diagram

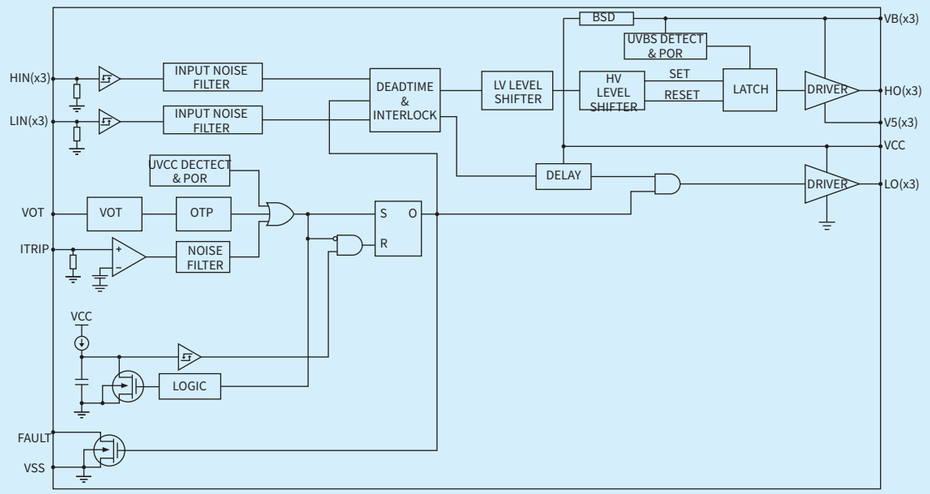

INTEGRATED
DEVICE MANUFACTURER
垂直整合制造



APPLICATION
应用领域

新能源

新能源汽车
（主电驱、OBC、空调、转向等）
新能源发电
（光伏逆变器、风电变流器）

New Energy

New energy vehicles
(main electric drive, OBC, air conditioning, steering, etc.)
New energy power generation
(photovoltaic inverter, wind power converter)

工业控制

变频器
逆变焊机
不间断电源UPS等

Industrial Control

Frequency converters,
Inverter welder,
UPS, etc.

变频白色家电及其他

变频白电
轨道交通（牵引变流器）
智能电网等

Home Appliance and Others

Home appliance
Rail transit (traction converter)
Intelligent Power Management（IPM）

ADVANCED
LABORATORY
先进实验室



设有4大功能试验区：可独立进行17项可靠性测试、失效分析等各类试验室级产品分析及检测试验。

4 functional test areas: 17 reliability tests, failure analysis and other laboratory-scale product analysis and detection tests can be independently carried out.

测试规范完善，具备强大质量监控体系、系统验证能力和经验丰富的专业实验团队。

With perfect test specifications, the Company has a strong quality monitoring system, system verification ability and an experienced professional experimental team.

生产品质管控能力一流，助力高可靠性模块生产，系列产品良品率已达98%。

The production quality control ability is first-class, which helps the production of high-reliability modules, and the yield of series products has reached **98%.**

以顾客为导向的应用测试，可及时响应客制产品测试和检测需求，助力客制产品系列化开发。

Customer-oriented application testing can respond to the testing and detection requirements of customized products in time and help the serial development of customized products.

四大功能测试区 4 Functional Test Areas



提升产品研发的速度，保证批量产品的高品质和稳定性，提供一流的故障分析及可靠度测试分析服务！

Improve efficiency of R&D, ensure the high quality and stability products, provide first-class test service!

生产特性监控 On-line Production Inspection

制程特性

焊接空洞
打线监控
成品弯曲等生产全特性监控

Production Property

Welding cavity
Wire bonding monitoring
Finished product functional test, etc.

动态特性

开关特性
反向恢复
电容特性
栅极电荷
短路测试
寄生电容

Dynamic Property

Switching characteristics
Reverse recovery
Capacitance characteristics
Gate charge
Short circuit test
Stray capacitance

静态特性

静态参数
特性曲线

Static Property

Static parameters
Characteristic curves

可靠性监控 Reliability Tests

环境可靠性

西门子功率循环
高温反偏
高温拉力测试
高温栅偏
高温高湿反偏
震动测试
跌落测试
温度循环
冷热冲击
高低温储存
高加速老化

Environment Reliability

Power cycling
HTRB
High temp. ensile test
HTGB
H3TRB
Vibration Test
Drop Test
TCT
TST
HTS & LHS
HAST

失效分析 Failure Analysis

失效分析

3D 轮廓
RA、RZ粗糙度
金相显微镜
EDX元素分析
机械截面分析
SAT超声波扫描
2D Xray
离子无损截面分析
KEYSIGHT曲线追踪
SEM扫描

Failure Analysis

3D Contour
RA、RZ Roughness
Optical Microscope（OM）
EDX
AFM
SAT
2D Xray
Cross Section Polisher（CP）
KEYSIGHT technologies
Scanning Electron Microscopy (SEM)

应用测试 Application Test

车载系统

汽车牵引系统
车载充电系统
汽车充电桩
光伏逆变系统
智能电网逆变系统
铁路逆变系统

Vehicle-mounted Systems

Automobile traction system
Vehicle-mounted charging system
Vehicle charging pile
Photovoltaic inverter system
Smart grid inverter system
Railway inverter system

可靠性实验室 Reliability Laboratory

可靠性试验是发现产品潜在的失效机制，评估产品的失效率，进而确保产品在正常使用阶段不会出现任何失效机制。

Reliability Test is the process that can identify potential failure mechanisms of product, evaluate its failure rate, and ensure that the product does not exhibit any failure mechanisms during normal use.

机械测试 Mechanical Test

	测试项目 Test Item	测试目的 Test Purpose	测试标准 Test Standard	测试能力 Test Ability
	振动测试 Vibration	验证机械结构的牢固性和电气连接的稳定性。模拟器件在应用过程中的振动负载，并验证了器件在出现故障模式(如结构脱落和材料疲劳)时的抗振动能力 Verify the robustness of the mechanical structure and the stability of the electrical connections. The vibration load of the power module during application is simulated and the vibration resistance of the power module is verified in the presence of failure modes such as structural detachment and material fatigue.	IEC 60068 2-6 AEC-Q101 AQG-324	频率范围: 1~3500Hz 最大加速度: 981m/s 可测试X、Y、Z 三个方向 Frequency Range: 1~3500Hz Amax: 981m/s X, Y, Z directions test
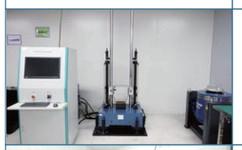	机械冲击测试 Shock	验证机械结构的整体性和电气连接的稳定性 Verify the integrity of the mechanical structure and the stability of the electrical connections.	IEC 60068 2-27 AEC-Q101 AQG-324	加速度范围：0~15000m/s2 脉宽: 0.5~20ms 可测试X、Y、Z 三个方向 Acceleration range：0~15000m/s2 Pulse Width: 0.5~20ms X, Y, Z directions test
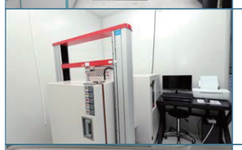	端子强度 Terminal Strength	评估产品端子是否有足够的机械强度 Evaluate whether the product terminals have sufficient mechanical strength.	AEC-Q101 外观无破损、PIN针无脱落 The appearance is not damaged, and the PIN is not falling off.	温度范围: -40~200°C 拉力范围: 0~960N.m Temp. Range: -40~200°C Tension Range: 0~960N.m
	安装强度 Mounting Strength	评估产品在固定力矩下的可靠性 Evaluate the reliability of the product in condition of fixed torque.	外壳完整度、无破裂 Shell integrity, no rupture	扭力范围 : 0.2~20N.m Torque Range : 0.2~20N.m
	焊锡性 Solderability	评估产品的可焊性 Evaluate the weldability of the product.	GB/T 2423.28 AEC-Q101	温度范围: 0~350°C Temp. Range: 0~350°C
	焊接耐热性 Resistance to Solder Heat	评估产品PIN针的耐热性 Evaluate the heat resistance of product pins.	GB/T 2423.28 AEC-Q101	温度范围: 0~350°C Temp. Range: 0~350°C

环境测试 Environmental Test

	测试项目 Test Item	测试目的 Test Purpose	测试标准 Test Standard	测试能力 Test Ability
	高温存储试验 HTS	评估产品在高温条件下的可靠性及电性性能 Evaluate the reliability and electrical performance of products in condition of high temperature.	IEC 60749-6 AQG-324	温度范围: 60~300 °C Temperature range: 60~300 °C
	低温存储测试 LHS	评估产品在低温条件下的可靠性及电性性能 Evaluate the reliability and electrical performance of products in condition of low temperature.	JESD22-A119 AQG-324	温度范围: -70~150 ° C 湿度范围: 20~98% RH Temperature range: -70~150 ° C Humidity range: 20~98% RH
	高加速老化测试 HAST	评估产品在环境应力与工作应力条件下的产品寿命及电性性能 Evaluate the lifespan and electrical performance of products in condition of environmental stress and working stress.	IEC 60068-2-66 AEC-Q101	温度范围: 105~142.9°C 湿度范围:75~100%RH 压力范围:0.02~0.196MPa Temperature range: 105~142.9°C Humidity range:75~100%RH Pressure range:0.02~0.196MPa
	温湿度储存测试 THS	评估产品在恒温恒湿条件下的可靠性及电性性能 Evaluate the reliability and electrical performance of products in condition of constant temperature and humidity.	IEC 60068-2-67	温度范围: -20~180 ° C 湿度范围: 10~98% RH Temperature range: -20~180 ° C Humidity range: 10~98% RH
	温度循环试验 TCT	用于模拟外界温度变化对产品的影响，验证器件或模块的整体结构和材料 Used to simulate the impact of external temperature changes on products, verify the overall structure and materials of power devices or modules.	IEC 60749-25 AEC-Q101	温度范围: -70~180 ° C 温度变换速率:26°C/min Temperature range: -70~180 ° C Temperature change rate: 26 ° C/min
	温度冲击测试 TST	验证IGBT在被动温度变化的情况下对机械应力的抵抗能力 Verify the resistance of IGBT to mechanical stress in condition of passive temperature changes.	IEC 60068-2-14 AQG-324	高温温度范围: 60~205 ° C 低温温度范围: -77~0 ° C 温度转换阶段时间: 10s High temperature range: 60~205 ° C Low temperature range: -77~0 ° C Temperature conversion phase time: 10s

耐力测试 Endurance Test

	测试项目 Test Item	测试目的 Test Purpose	测试标准 Test Standard	测试能力 Test Ability
	高温反偏老化试验 HTRB	主要用于验证长期稳定情况下芯片的漏电流，考验对象是IGBT边缘结构和钝化层的弱点或退化效应。 Evaluate the leakage current of the power device in condition of high temperature and reverse bias conditions.	IEC 60749-9 AEC-Q101 AQG-324	温度范围: 20~200 ° C 电压范围: 0~2000V Temperature range: 20~200 ° C Voltage range: 0~2000V
	高温栅反偏老化试验 HTGB	主要用于验证栅极漏电流的稳定性，考验对象是IGBT栅极氧化层。 Verify the stability of gate leakage current, the test object is the IGBT gate oxide layer.	IEC 60749-9 AEC-Q101 AQG-324	温度范围: 20~200 ° C 电压范围: 0-30V Temperature range: 20~200 ° C Voltage range: 0-30V
	高温高湿反偏老化试验 H3TRB	又名双85测试，主要用于测试湿度对功率器件长期特性的影响。 Also known as Double 85 Test, it is mainly used to test the impact of humidity on the long-term characteristics of power devices.	IEC 60749-9 AEC-Q101 AQG-324	温度范围: 20~100 ° C 湿度范围: 25~98% RH 电压范围: 0-2000V Temperature range: 20~100 ° C Humidity range: 25~98% RH Voltage range: 0-2000V
	功率循环测试(分钟级) PC / min	评估器件在重复热应力下的可靠性和寿命。(分钟级) Evaluate the reliability and lifespan of the device in condition of repeated thermal stress. (Minute-level)	IEC 60749-34 AEC-Q101 AQG-324	设备输出:四通道 单通道最大电流600A 最大可输出电流2400A Current output: four channels Single channel maximum current 600A Maximum output current 2400A
	功率循环测试(秒级) PC /sec	评估器件在重复热应力下的可靠性和寿命。(秒级) Evaluate the reliability and lifespan of the device in condition of repeated thermal stress. (Second-level)	IEC 60749-34 AEC-Q101 AQG-324	设备输出:四通道 单通道最大电流600A 最大可输出电流1800A Current output: four channels Single channel maximum current 600A Maximum output current 1800A

失效分析实验室 Failure Analysis Laboratory



失效分析是为确定和分析失效器件的失效模式、失效机理、失效原因和失效性质而对产品所做的分析和检查。

Failure analysis is the analysis and inspection of a product to determine and analyze the failure mode, failure mechanism, failure cause, and failure property for failed devices.

拥有经验丰富的专业实验团队，高效的失效分析能力。精湛的样品制备技术，如切片分析+离子束研磨等。

Experienced professional experimental team, efficient failure analysis ability.
Excellent sample preparation techniques, such as Cross Section Polisher + ion beam grinding, etc.

独立失效分析实验室，具备各类专业仪器设备，实验规范及制度完善，贯穿产品生命周期的各个环节。可对材料表面和剖面、材料内部及材料半成品进行微区或其成份元素的全面分析。

Independent failure analysis laboratory, with all kinds of professional instruments and equipments, experimental standards and perfect system, throughout all aspects of the product life cycle. The surface and profile of the material, the interior of the material and the semi-finished product of the material can be fully analyzed in microregion or their component elements.

系统级测试平台，以全覆盖测试方式，对设计研发、生产和应用过程中的失效问题进行精细化分析，可快速有效找到失效具体位置、失效原因及预防措施，满足用户对高品质高可靠性产品要求。

System-level test platform, with full coverage test method, fine analysis of failure problems during the R&D, production and application process, can quickly and effectively find the failure specific location, failure causes and preventive measures to meet customers' requirements for high-quality and reliable products.

SEM/EDX

SEM景深大、分辨率高，放大倍率可达到数十万倍以上，可用来观察样品表面及剖面微结构；另配备EDS，可对样品表面同时进行微区之材料分析，包括定性、半定量之成分分析以及特定区域之Point、Line Scan、Mapping分析。

SEM has a large depth of field, high resolution, and a magnification of hundreds of thousands of times or more, which can be used to observe the surface and profile microstructure of samples; Equipped with EDS, it can simultaneously perform micro area material analysis on the surface of the sample, including qualitative and semi quantitative component analysis, as well as point, line scan, and mapping analysis for specific areas.

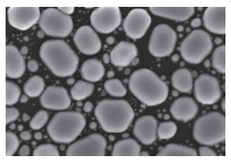

金颗粒的高解析影像
High resolution images of gold particles

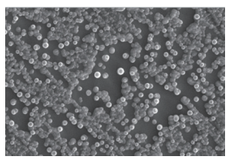

铜颗粒的高解析影像
High resolution images of copper particles

2D X-ray

2D X-ray检测，是当前非破坏检测产品内部缺陷分析有效率且快速的方法，X-ray可检测待测物内部结构及是否有缺陷、空洞(Void)、Crack等异常。

2D X-ray detection is currently an effective and fast method for analyzing internal defects in non-destructive testing products. X-ray can detect the internal structure of the tested object and whether there are defects, voids, cracks, and other abnormalities.

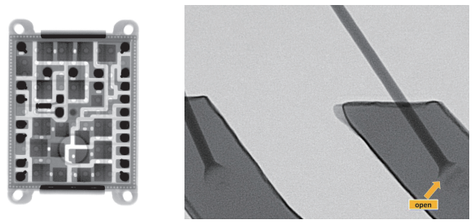

离子束研磨 Cross Section Polisher (CP)

离子束剖面研磨、离子束截面研磨(Cross Section Polisher, 简称CP)，是利用离子束切割方式，去切削出样品的剖面，不同于一般样品剖面研磨，离子束切削的方式可避免因研磨过程所产生的应力影响。

Ion beam profile grinding, Cross Section Polisher (referred to as CP), it uses ion beam cutting to cut the profile of a sample. Unlike general sample profile grinding, ion beam cutting can avoid stress effects caused by the grinding process.

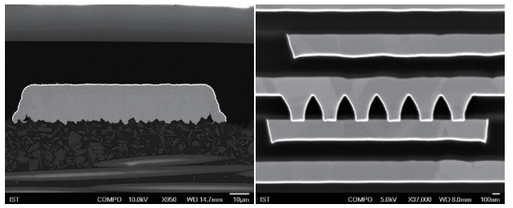

双眼显微镜 Optical Microscope (OM)

透过光学的透镜放大、缩小及CCD来撷摄取影像，进行表面形貌观察。

Using optical lenses for magnification, reduction, and CCD to capture images and observe surface morphology.

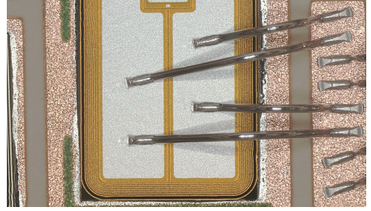

SAT 超声波扫描

SAT超声波可用来检测芯片组件内部不同位置的脱层(Delamination)、裂缝(Crack)、气洞及粘着状况，多用于检察芯片封胶内的缺陷。

SAT ultrasound can be used to detect delamination, cracks, air holes, and adhesion at different positions inside chip components, and is often used to inspect defects inside chip seals.

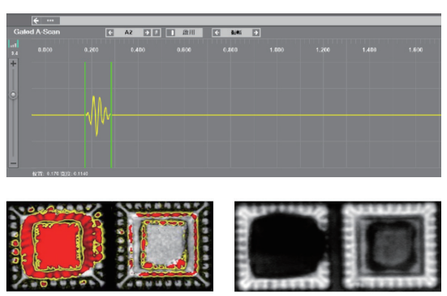

切片分析 PCBA (X-section)

快速的样品制备方式之一，利用砂纸或钻石砂纸，加上后续的抛光，可处理出清晰的样品表面。

One of the fast sample preparation methods is to use sandpaper or diamond sandpaper, combined with subsequent polishing, to produce a clear sample surface.

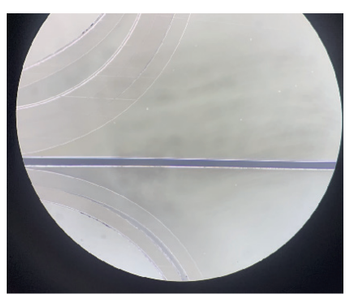

红药水渗透 Red Medicine Penetration Test

利用液体具有渗透的特性，可以渗透到所有的焊锡缝隙来判断焊接是否完好。

By utilizing the permeability of liquids, it can penetrate all solder gaps to determine the integrity of the welding process.

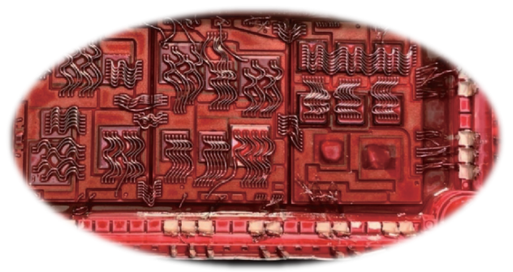

弹坑试验 Crater Test

芯片失效分析时,需分析内部的芯片、打线、组件，因封装胶体阻挡观察，利用「laser蚀刻」及「湿式蚀刻」两种搭配使用，使封装体内包覆的对象裸露出来，以便后续相关实验处理、观察。

It is necessary to analyze the internal chips, wiring, and components during chip failure analysis. Due to the obstruction of the packaging colloid, two combinations of "laser etching" and "wet etching" are used to expose the objects inside the packaging for subsequent experimental processing and observation.

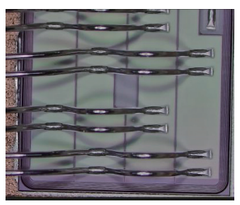

弹坑前

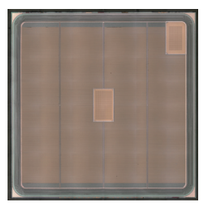

弹坑后

BRAND
CULTURE
品牌文化

战略目标 STRATEGIC GOAL

致力于
高端功率半导体器件国产化

Committed to the localization of high-end power semiconductor devices.

愿景 VISION

从“芯”出发 改变世界

Changing the world starts from the chips!

使命 MISSION

智造赋能“芯”未来

Empower the future of “chip” based on smart manufacturing.

价值观 VALUES

知常明变 守正创新
协同互信 精业笃行

Knowledgeable Flexible Integrity Innovation
Collaborative Mutual trust Diligent Dedicated

经营理念 BUSINESS PHILOSOPHY

功“芯”兴国
功率之芯，兴盛国家

Achieving national prosperity with powerful “chip” .
Making the country prosperous with powerful chips.

创“芯”引领
创新之芯，技术领先

Leading the technology with innovative “chip”.
Achieving technological leadership with innovative chips.

效“芯”双益
效能之芯，双赢益彩

Making mutual benefits with efficient “chip”.
Achieving win-win with efficient chips.

初“芯”共进
初心之芯，同心共进

Making progress together with original intention.
Developing together with the original intention in mind.

LIONSGATE SEMI



CONTACT US

销售&应用 Sales & Application

+86 – 173 1713 6051
Sales@lionsgateigbt.com
上海市松江区新波路517弄8号
No.8, Lane 517 Xinbo Rd., Songjiang, Shanghai, 201600, China

售后服务 After Service

+86 - 021 - 5786 6090 - 8011
Aftersales@ lionsgateigbt.com
上海市松江区新波路517弄8号
No.8, Lane 517 Xinbo Rd., Songjiang, Shanghai, 201600, China

市场推广 Marketing

+86 -199 2103 8780
Markting@lionsgateigbt.com
上海市松江区新波路517弄8号
No.8, Lane 517 Xinbo Rd., Songjiang, Shanghai, 201600, China

人力资源 HR

+86 – 189 1702 1080
HR@lionsgateigbt.com
上海市松江区新波路517弄8号
No.8, Lane 517 Xinbo Rd., Songjiang, Shanghai, 201600, China

上海狮门半导体有限公司
Shanghai Lionsgate Semiconductor Co., Ltd.
+86 - 021 - 5786 6090
上海市松江区新波路517弄8号
No.8, Lane 517 Xinbo Rd., Songjiang, Shanghai, 201600, China

狮门微电子(温岭)股份有限公司
Lionsgate Microelectronics (Wenling) Co, Ltd.
+86-0576-8997 0360
浙江省台州温岭市莞渭童工业区华茂路358号
No.358, Huamao Rd., GuanWeitong Industrial Park, Wenling, Taizhou, Zhejiang Province, 317500, China